NGORONGORO CONSERVATION AREA AUTHORITY

CONTRACT NO. AE/055/2021 - 22/HQ/TCRP/G/01 LOT 1 SUPPLY OF ONE (1) UNIT WHEEL EXCAVATOR

Ngorongoro Conservation Area Authority
P.o.Box 1,
Ngorongoro Crater

JANUARY, 2022

FORM OF AGREEMENT

THIS AGREEMENT made the 20TH day of JANUARY 20 22 between **NGORONGORO CONSERVATION AREA AUTHORITY, P.O BOX 1, NGORONGORO CRATER** of Tanzania of Tanzania (hereinafter called "the PE") of the one part and **M/S MANTRAC TANZANIA LIMITED P.O. BOX 9262, DAR ES SALAAM** of Tanzania (hereinafter called "the Supplier") of the other part:

WHEREAS the PE invited Tenders for certain goods and ancillary services, viz., Supply of One (1) Unit Wheel Excavator and has accepted a Tender by the Supplier for the supply of those goods and services in the sum of **Tanzania Shillings Six Hundred Seventy Six Million Four Hundred Ninety Four Thousand Only (TZS. 676,494,000.00)** VAT inclusive for a delivery period of four (4) months after contract signing (hereinafter called "the Contract Price").

NOW THIS AGREEMENT WITNESSETH AS FOLLOWS:

1. In this Agreement words and expressions shall have the same meanings as are respectively assigned to them in the Conditions of Contract referred to.
2. The following documents shall be deemed to form and be read and construed as part of this Agreement, In the event of any ambiguity or conflict between the Contract Documents listed below, the order of precedence shall be the order in which the Contract Documents are listed below: -
    (a) Form of Contract,
    (b) Special Conditions of Contract,
    (c) General Conditions of Contract,
    (d) Letter of Acceptance,
    (e) Schedule of requirements and price
    (f) Certificate of Contract Commencement
    (g) Specifications
    (h) Contractor's Tender,
    (i) Power of Attorney,
    (j) Integrity Form, and
    (k) Performance Bond
    (l) Manufacturer Authorization Form
3. In consideration of the payments to be made by the PE to the Supplier as hereinafter mentioned, the Supplier hereby covenants with the PE to provide the goods and services and to remedy defects therein in conformity in all respects with the provisions of the Contract
4. The PE hereby covenants to pay the Supplier in consideration of the provision of the goods and services and the remedying of defects therein, the Contract Price **Tanzania Shillings Six Hundred Seventy Six Million Four Hundred Ninety Four Thousand Only (TZS. 676,494,000.00)** VAT inclusive for a delivery period of four (4) months or such

other sum as may become payable under the provisions of the contract at the times and in the manner prescribed by the contract.

IN WITNESS whereof the parties hereto have caused this Agreement to be executed in accordance with their respective laws the day and year first above written.

Signed by, for and on behalf of the PE (**NGORONGORO CONSERVATION AREA AUTHORITY**)

1. Name: Christopher D. Timbuka
   Qualification: Ag. Conservation Commissioner
   Signature: ...
   P. O. BOX 1, NGORONGORO CRATER

SEAL

Witness to the signatures of the PE

2. Name: Jumanne Pedo
   Qualification: Ag: SACC Legal Senior
   Signature: ...
   P. O. BOX 1, NGORONGORO CRATER

For and on behalf of the Supplier **M/S MANTRAC TANZANIA LTD,**

1. Name: BUTWA GODLUCK SANGA
   Qualification: GM MACHINE SALES
   Signature: ...
   P.O. Box 9262, DAR ES SALAAM

MANTRAC (T) LTD.
P. O. B x 9262
DAR ES SALAAM

SEAL

Witness to the signatures of the Supplier:

2. Name: WILLIAM KIKORICHO
   Qualification: USED AND RENTAL FLEET COORD.
   Signature: ...
   P.O. Box 9262, DAR ES SALAAM

SPECIAL CONDITIONS OF CONTRACT

SPECIAL CONDITIONS OF CONTRACT (SCC)

The following Special Conditions of Contract (SCC) shall supplement the GCC. Whenever there is a conflict, the provisions herein shall prevail over those in the GCC. The corresponding clause number of the GCC is indicated in parentheses.

SCC Clause Number	GCC Clause Number	Amendments of, and Supplements to, Clauses in the GCC
	Definitions (GCC 1)	
1.	1.1(j)	The Purchaser is: Ngorongoro Conservation Area Authority (NCAA) P.o Box 1, Ngorongoro Crater, Arusha, Tanzania. TEL: +255 27 255 253 7006/19 +255 27 255 253 7046 FAX: +255 27 255 253 7007 Email: cc@ncaa.go.tz pmu@ncaa.go.tz
2.	1.1(p)	The Supplier is: MANTRAC TANZANIA LIMITED P.O. BOX 9262, DAR ES SALAAM
3.	1.1(q)	The Project is: SUPPLY OF ONE (1) UNIT WHEEL EXCAVATOR TENDER NO. AE/055/2021 - 22/HQ/TCRP/G/01
	Governing Language (GCC 4)	
4.	4.1	The Governing Language shall be: English
	Applicable Law (GCC 5)	
5.	5.1	The Applicable Law shall be: Laws of of Tanzania
	Country of Origin (GCC 6)	
6.	6.1	Country of Origin is: USA, Belgium, Finland, Brazil, UK, Thailand or China
	Performance Security (GCC 10)	
7.	10.1	The amount of performance security, as a percentage of the Contract Price, shall be: Ten (10) percent of the Contract Price.

8.	10.4	After delivery and acceptance of the Goods, the performance security shall be reduced to two (2) percent of the Contract Price to cover the Supplier's warranty obligations in accordance with GCC 18.2.
	Inspections and Tests (GCC 11)	
9.	11.1	Inspection and tests prior to shipment of Goods and at final acceptance are as follows: Quality and quantity inspection shall be carried out prior to shipment of Goods by the manufacturer(s) at the supplier's own expense and responsibility in terms of the items specified in the specifications. The supplier shall submit the inspection certificate issued by himself which should be attached with the certificate(s) of the manufacturer(s) to the PE in order to ensure that the goods are manufactured in compliance with the contract.
	Packing (GCC 12)	
10.	12.2	The following SCC shall supplement GCC 12.2: The Goods shall be packed properly in accordance with standard export packing specified by the PE in the Technical Specification.
	Delivery and Documents (GCC 13)	
11.	13.1	**For Goods supplied from abroad: N/A** Upon shipment, the Supplier shall notify the Purchaser and the Insurance Company by cable the full details of the shipment, including Contract number, description of Goods, quantity, the vessel, the bill of lading number and date, port of loading, date of shipment, port of discharge, etc. The Supplier shall mail the following documents to the Purchaser, with a copy to the Insurance Company: (i.) One original plus four copies of the Supplier's invoice showing Goods' description, quantity, unit price, and total amount; (ii.) original and four copies of the negotiable, clean, on-board bill of lading marked "freight prepaid" and four copies of nonnegotiable bill of lading;

		(iii.) One original plus four copies of the packing list identifying contents of each package; (iv.) insurance certificate; (v.) Manufacturer's or Supplier's warranty certificate; (vi.) inspection certificate, issued by the nominated inspection agency, and the Supplier's factory inspection report; and (vii.) certificate of country of origin issued by the chamber of commerce and industry or equivalent authority in the country of origin in duplicate. The above documents shall be received by the PE at least one week before arrival of the Goods at the port or place of arrival and, if not received, the Supplier will be responsible for any consequent expenses.
12.	13.3	**For Goods from within the United Republic of Tanzania:** Upon delivery of the Goods to the transporter, the Supplier shall notify the PE and mail the following documents to the PE: (i.) one original plus four copies of the Supplier's invoice showing goods' description, quantity, unit price, and total amount; (ii.) delivery note, railway receipt, or truck receipt; (iii.) Manufacturers or Supplier's warranty certificate; (iv.) inspection certificate issued by the nominated inspection agency, and the Supplier's factory inspection report; and (v.) certificate of country of origin issued by the Tanzania Chamber of Commerce, Industry and Agri...

		equivalent to the amount of ten percent of the contract value.
17.	18.4 & 18.5	The period for correction of defects in the warranty period is: Three (3) Months for the warrant period
	Payment (GCC 19)	
18.	19.1	The method and conditions of payment to be made to the Supplier under this Contract shall be as follows: **Payment for Goods supplied from abroad: N/A** Payment of foreign currency portion shall be made in: N/A. (i) **Advance Payment:** 15 percent of the Contract Price shall be paid within thirty (30) days of signing of the Contract, and upon submission of claim and a bank guarantee for equivalent amount valid until the Goods are delivered and in the form provided in the Tendering Documents or another form acceptable to the PE. (ii) **On delivery:** percent of the Contract Price of the Goods shipped shall be paid through irrevocable confirmed letter of credit opened in favor of the Supplier in a bank in its country, upon submission of documents specified in GCC 10. NA (iii) **On Acceptance:** The remaining 85 percent of the Contract Price of Goods received shall be paid within thirty (30) days of receipt of the Goods upon submission of claim supported by the acceptance certificate issued by the PE. Payment of local currency portion shall be made in *Tanzania Shillings* within thirty (30) days of presentation of claim supported by a certificate from the PE declaring that the Goods have been delivered and that all other contracted Services have been performed.
		Payment for Goods and Services supplied from within the United

		Republic of Tanzania: Payment for Goods and Services supplied from within the United Republic of Tanzania shall be made in Tanzanian Shillings, as follows: (i) **Advance Payment:** 15 percent of the Contract Price shall be paid within Fourteen (14) days of signing of the Contract against a simple receipt and a bank guarantee for the equivalent amount and in the form provided in the Tendering Documents or another form acceptable to the PE. (ii) **On Delivery:** 75 percent of the Contract Price shall be paid on receipt of the Goods and upon submission of the documents specified in GCC 11. (iii) **On Acceptance:** 20 percent of the Contract Price shall be paid to the Supplier within thirty (30) days after the date of the acceptance certificate for the respective delivery issued by the PE.
19.	19.3	Rate to be used for paying the Supplier's interest on the late payment made by PE shall be determined by bank of Tanzania on the date of contract signature.
	Prices (GCC 20)	
20.	20.1	Prices shall not be adjusted
	Liquidated Damages (GCC 26)	
21.	25.1	Applicable rate: 0.10 per cent per day of undelivered/delayed good's value. Maximum deduction: is equal to the performance security.
	Procedure for Dispute Resolution (GCC 32)	
23.	32.3	Arbitration institution shall be Tanzania institute of Arbitrators. Place for carrying out Arbitration: Arusha City, NCAA Njiro Office.
24.	33.1	Appointing Authority for the Adjudicator: Tanzania Institute of

		Arbitrators
	Notices (GCC 35)	
26.	35.1	i) PE's address for notice purposes: Conservation Commisioner, Ngorongoro Conservation Area Authority, P.o Box 1, Ngorongoro Crater, Arusha, Tanzania, TEL: +255 27 255 253 7006/19 +255 27 255 253 7046 FAX: +255 27 255 253 7007 Email: cc@ncaa.go.tz pmu@ncaa.go.tz i) Supplier's address for notice purposes: MANTRAC TANZANIA LIMITED P.O. BOX 9262, DAR ES SALAAM Email: mantrac@mantractanzania.com

GENERAL CONDITIONS OF THE CONTRACT

GENERAL CONDITIONS OF THE CONTRACT (GCC)

1.	**Definitions**	1.1	The following words and expressions shall have the meanings hereby assigned to them:	
			a)	The **Adjudicator** is the person appointed by the appointing authority specified in the Special Conditions of Contract (SCC), to resolve contractual disputes in the first instance, and as provided for in General Conditions of the Contact (GCC) 31 hereunder.
			b)	The **Arbitrator** is the person appointed by the appointing authority specified in the **SCC**, to resolve contractual disputes.
			c)	"**The Contract**" means the agreement entered into between the Procuring Entity (PE) and the Supplier, as recorded in the Contract Form signed by the parties, including all attachments and appendices thereto and all documents incorporated by reference therein.
			d)	The **Commencement Date** is the date when the Supplier shall commence execution of the contract as specified in the **SCC**
			e)	"**Completion**" means the fulfillment of the related services by the Supplier in accordance with the terms and conditions set forth in the contract
			f)	The Contract Price is the price stated in the Letter of Acceptance and thereafter as adjusted in accordance with the provisions of the Contract Days are calendar days
			g	A Defective Goods are those goods which are below standards, requirements or specifications stated by the Contract.
			h)	"Delivery" means the transfer of the goods from the supplier equipment, machinery, and /or other materials which the Supplier is required to supply to the PE under

				Contract.
			i)	"Effective Contract date" is the date shown in the Certificate of Contract Commencement issued by the Employer upon fulfillment of the conditions precedent stipulated in GCC 3.
			j)	"The Purchaser" means the person named as purchaser in the SCC and the legal successors in title to this person
			k)	"The Related Services" means those services ancillary to the supply of the Goods, such as transportation and insurance, and any other incidental services, such as installation, commissioning, provision of technical assistance, training, initial maintenance and other such obligations of the Supplier covered under the Contract.
			l)	"GCC" means the General Conditions of Contract contained in this section.
			m)	The **Intended Delivery Date** is the date on which it is intended that the Supplier shall effect delivery as specified in the **SCC**
			n)	"SCC" means the Special Conditions of Contract.
			o)	"The PE" means the entity purchasing the Goods and related service, as named in **SCC.**
			p)	"The **Supplier**" means the individual private or government entity or a combination of the above whose Tender to perform the contract has been accepted by the PE and is named as such in the Contract Agreement, and includes the legal successors or permitted assigns of the supplier and shall be named in the SCC.
			q)	"The Project Name" means the name of the project stated in SCC.
			r)	"Day" means calendar day.
			s)	'Eligible Country" means the countries and territories eligible for participation in procurements financed by the

				specified institution.
			t)	"End User" means the organization(s) where the goods will be used, as **named in the SCC.**
			u)	"Origin" means the place where the Goods were mined, grown, or produced or from which the Services are supplied. Goods are produced when, through manufacturing, processing, or substantial and major assembly of components, a commercially recognized new produce results that is substantially different in basic characteristics or in purpose or utility from its components.
			v)	"Force Majeure" means an unforeseeable event which is beyond reasonable control of either Party and which makes a Party's performance of its obligations under the Contract impossible or so impractical as to be considered impossible under the circumstances. For the purposes of this Contract, "Force Majeure" means an event which is beyond the reasonable control of a Party, is not foreseeable, is unavoidable, and its origin is not due to negligence or lack of care on the part of a Party, and which makes a Party's performance of its obligations hereunder impossible or so impractical as reasonably to be considered impossible in the circumstances. and includes, but is not limited to, war, riots, civil disorder, earthquake, fire, explosion, storm, flood, epidemics, or other adverse weather conditions, strikes, lockouts or other industrial action (except where such strikes, lockouts or other industrial action are within the power of the Party invoking Force Majeure to prevent), confiscation or any other action by Government agencies.
			w)	**Specification** means the Specification of the Works included in the Contract and any modification or addition made or approved by the Project Manager. The **Supplier** is the person, whether natural or legal whose Tender to deliver goods or services has been

			x)	accepted by the Employer
			y)	The **Supplier's Tender** is the completed Tender document submitted by the Supplier to the Employer
2.	**Application and interpretation**	2.1		These General Conditions shall apply to the extent that they are not superseded by provisions of other parts of the Contract.
		2.2		In interpreting these Conditions of Contract headings and marginal notes are used for convenience only and shall not affect their interpretations unless specifically stated; references to singular include the plural and vice versa; and masculine include the feminine. Words have their ordinary meaning under the language of the Contract unless specifically defined.
		2.3		The documents forming the Contract shall be interpreted in the following order of priority: (a) Form of Contract, (b) Special Conditions of Contract, (c) General Conditions of Contract, (d) Letter of Acceptance, (l) Schedule of requirements and price (e) Certificate of Contract Commencement (f) Specifications (g) Contractor's Tender, (h) Power of Attorney, (i) Integrity Form, and (j) Performance Bond

3.	**Conditions Precedent**	3.1	Having signed the Contract, it shall come into effect on the date on which the following conditions have been satisfied:- a) Submission of performance Security in the form specified in the SCC; b) Furnishing of Advance Payment Unconditional Guarantee.
		3.2	If the Condition precedent stipulated on GCC 3.1 is not met by the date specified in the SCC this contract shall not come into effect;
		3.2	If the Employer is satisfied that each of the conditions precedent in this contract has been satisfied (except to the extent waved by him, but subject to such conditions as he shall impose in respect of such waiver)he shall promptly issue to the supplier a certificate of Contract commencement, which shall confirm the start date.
4.	**Governing Language**	4.1	The Contract as all correspondence and documents relating to the contract exchanged by the Supplier and the PE shall be written in the language specified in **SCC**. Subject to GCC 3.1, the version of the Contract written in the specified language shall govern its interpretation.
5.	**Applicable Law**	5.1	The contract shall be governed and interpreted in accordance with the laws of the United Republic of Tanzania, unless otherwise specified in **SCC.**
6.	**Country of Origin**	6.1	The origin of Goods and Services may be distinct from the nationality of the Supplier.

7.	**Standards**	7.1	The Goods supplied under this Contract shall conform to the standards mentioned in the Technical Specifications, and, when no applicable standard is mentioned, to the authoritative standards appropriate to the Goods' country of origin. Such standards shall be the latest issued by the concerned institution.
8.	**Use of Contract Documents and Information; Inspection and Audit by the Government of Tanzania**	8.1	The Supplier shall not, without the PE's prior written consent, disclose the Contract, or any provision thereof, or any specification, plan, drawing, pattern, sample, or information furnished by or on behalf of the PE in connection therewith, to any person other than a person employed by the Supplier in the performance of the Contract. Disclosure to any such employed person shall be made in confidence and shall extend only as far as may be necessary for purposes of such performance.
		8.2	The Supplier shall not, without the PE's prior written consent, make use of any document or information enumerated in GCC 7.1 except for purposes of performing the Contract.
		8.3	Any document, other than the Contract itself, enumerated in GCC 7.1 shall remain the property of the PE and shall be returned (all copies) to the PE on completion of the Supplier's performance under the Contract if so required by the PE.
		8.4	The Supplier shall permit the Government of the United Republic of Tanzania or / and donor agencies involved in financing the project to inspect the Supplier's accounts and records relating to the performance of the Supplier and to have them audited by auditors appointed by the Government of the United Republic of Tanzania or / and the appropriate donor agencies, if so required by the Government of the United Republic of Tanzania or / and the appropriate donor agencies.

9.	**Patent and Copy Rights**	9.1	The Supplier shall indemnify the PE against all third-party claims of infringement of patent, trademark, or industrial design rights arising from use of the Goods or any part thereof in the United Republic of Tanzania.	
		9.2	The patent right in all drawings, documents, and other materials containing data and information furnished to the PE by the Supplier herein shall remain vested in the supplier, or, if they are furnished to the PE directly, or through the Supplier by any third party, including suppliers of materials, the patent right in such materials shall remain vested in such third party.	
10.	**Performance Security**	10.1	The Performance Security shall be provided to the Employer no later than the date specified in the Letter of Acceptance and shall be issued in an amount and form and by a bank or surety acceptable to the Employer, and denominated in the types and proportions of the currencies in which the Contract Price is payable as specified in the SCC.	
		10.2	The proceeds of the performance security shall be payable to the PE as compensation for any loss resulting from the Supplier's failure to complete its obligations under the Contract.	
		10.3	The performance security shall be in one of the following forms:	
			a)	A bank guarantee, an irrevocable letter of credit issued by a reputable bank, or an insurance bond issued by a reputable insurance firm located in the United Republic of Tanzania or abroad, acceptable to the PE, in the form provided in the Tendering Documents or another form acceptable to the PE; or
			b)	A cashier's or certified check.

		10.4	The performance security will be discharged by the PE and returned to the Supplier not later than thirty (30) days following the date of completion of the Supplier's performance obligations under the Contract, including any warranty obligations, unless otherwise specified in **SCC**.
		10.5	Where circumstances necessitate the amendment of the contract after signature, and such amendment is effected, the PE shall require the Supplier to provide additional Performance Security to cover any cumulative increase of more than ten percent of the initial Contract Price.
11.	**Inspections and Test**	11.1	The PE or its representative shall have the right to inspect and /or to test the Goods to confirm their conformity to the Contract specifications at no extra cost to the PE. **SCC** and the Technical Specifications shall specify what inspections and tests the PE shall notify the Supplier in writing or in electronic forms that provide record of the content of communication, in a timely manner, of the identity of any representatives retained for these purposes.
		11.2	The inspections and tests may be conducted on the premises of the Supplier or its subcontractor(s), at point of delivery, and/or at the Goods' final destination. If conducted on the premises of the Supplier or its subcontractor(s), all reasonable facilities and assistance, including access to drawings and production data, shall be furnished to the inspectors at no charge to the PE.
		11.3	Should any inspected or tested Goods fail to conform to the Specifications, the PE may reject the Goods, and the Supplier shall replace the rejected Goods to meet sp[illegible]

12.	**Packing**	12.1	The supplier shall provide such packing of the

14.	**Insurance**	14.1	The Goods supplied under the Contract shall be fully insured in a freely convertible currency against loss or damage incidental to manufacture or acquisition, transportation, storage, and delivery in the manner specified in the **SCC.**	
15.	**Transportation**	15.1	Where the Supplier is required under Contract to deliver the Goods FOB, transport of the Goods, up to and including the point of putting the Goods on board the vessel at the specified port of loading, shall be arranged and paid for by the Supplier, and the cost thereof shall be included in the Contract Price. Where the Supplier is required under the Contract to deliver the Goods FCA, transport of the Goods and delivery into the custody of the carrier at the place named by the PE or other agreed point shall be arranged and paid for by the Supplier, and the cost thereof shall be included in the Contract Price.	
		15.2	Where the Supplier is required under Contract to deliver the Goods CIF or CIP, transport of the Goods to the port of destination or such other named place of destination in the United Republic of Tanzania, as shall be specified in the Contract, shall be arranged and paid for by the Supplier, and the cost thereof shall be included in the Contract Price.	
		15.3	Where the Supplier is required under the Contract to transport the Goods to a specified place of destination within the United Republic of Tanzania, defined as the Project Site, transport to such place of destination in the United Republic of Tanzania, including insurance and storage, as shall be specified in the Contract, shall be arranged by the Supplier, and related costs shall be included in the Contract Price.	
16.	**Incidental Services**	16.1	The Supplier may be required to provide any or all of the following services, including additional services, if any, specified in **SCC**:	
			a)	Performance or supervision of on-site assembly and/or start-up of the supplied Goods;
			b)	Furnishing of tools required for assembly and/or maintenance of the supplied Goods;
			c)	Furnishing of a detailed operations and maintenance manual for each appropriate unit of the supplied Goods;

			d)	Performance or supervision or maintenance and/or repair of the supplied Goods, for a period of time agreed by the parties, provided that this service shall not relieve the Supplier of any warranty obligations under this Contract; and
			e)	Training of the PE's personnel, at the Supplier's plant and/or on-site, in assembly, start-up, operation, maintenance, and/or repair of the supplied Goods.
		16.2	Prices charged by the Supplier for incidental services, if not included in the Contract Price for the Goods, shall be agreed upon in advance by the parties and shall not exceed the prevailing rates charged to other parties by the Supplier for similar services.	
17.	**Spare Parts**	17.1	As specified in **SCC**, the Supplier may be required to provide any or all of the following materials, notifications, and information pertaining to spare parts manufactured or distributed by the Supplier:	
			a)	Such spare parts as the PE may elect to purchase from the Supplier, provided that this election shall not relieve the Supplier of any warranty obligations under the Contract; and
			b)	In the event of termination of production of the spare parts: i) advance notification to the PE of the pending termination, in sufficient time to permit the PE to procure needed requirements; and ii) following such termination, furnishing at no cost to the PE, the blueprints, drawings, and specifications of the spare parts, if requested.

18.	**Warranty**	18.1	The Supplier warrants that the Goods supplied under the Contract are new, unused, of the most recent or current models and that they incorporate all recent improvements in design and materials unless provided otherwise in the Contract. The Supplier further warrants that all Goods supplied under this Contract shall have no defect, arising from design, materials, or workmanship (except when the design and/or material is required by the PE, specifications) or from any act or omission of the Supplier, that may develop under normal use of the supplied Goods in the conditions prevailing in the United Republic of Tanzania.
		18.2	This warranty shall remain valid for a period specified in the **SCC** after the Goods, or any portion thereof as the case may be, have been delivered to and accepted at the final destination indicated in the Contract, or for a period specified in the **SCC** after the date of shipment from the port or place of loading in the source country, whichever period concludes earlier, unless specified otherwise in **SCC**.
		18.3	The PE shall promptly notify the Supplier in writing or in electronic forms that provide record of the content of communication of any claims arising under this warranty.
		18.4	Upon receipt of such notice, the Supplier shall, within the period specified in **SCC** and with all reasonable speed, repair or replace the defective Goods or parts thereof, without costs to the PE other than, where applicable, the cost of inland delivery of the repaired or replaced Goods or parts from EXW or the port or place of entry to entry to the final destination.
		18.5	If the Supplier, having been notified, fails to remedy the defect(s) within the period specified in **SCC**, the PE may proceed to take such remedial action as may be necessary, at the Supplier's risk and expense and without prejudice to any other rights which the PE may have against the Supplier under the Contract.

19.	**Payment**	19.1	The method and conditions of payment to be made to the Supplier under this Contract shall be specified in **SCC**.
		19.2	The Supplier's request(s) for payment shall be made to the PE in writing or in electronic forms that provide record of the content of communication, accompanied by an invoice describing, as appropriate, the Goods delivered and Services performed, and by documents submitted pursuant to GCC 13, and upon fulfillment of other obligations stipula[redacted]

				manufactured for the PE;
			b)	The method of shipment or packing;
			c)	The place of delivery; and/or
			d)	The Services to be provided by the Supplier.
		21.2	If any such change causes an increase or decrease in the cost of, or the time required for, the Supplier's performance of any provisi[redacted]	

25.	**Delays in the Supplier's Performance**	25.1	Delivery of the Goods and performance of Services shall be made by the Supplier in accordance with the time schedule prescribed by the Procuring Entity in the Schedule of Requirements.
		25.2	If at any time during performance of the Contract, the Supplier or its subcontractor(s) should encounter conditions impeding timely delivery of the Goods and performance of Services, the Supplier shall promptly notify the Procuring Entity in writing or in electronic forms that provide record of the content of communication of the fact of the delay, its likely duration and its cause(s). As soon as practicable after receipt of the Supplier's notice, the Procuring Entity shall evaluate the situation and may at its discretion extend the Supplier's time for performance, with or without liquidated damages, in which case the extension shall be ratified by the parties by amendment of Contract.
		25.3	Except as provided under GCC 28, a delay by the Supplier in the performance of its delivery obligations shall render the Supplier liable to the imposition of liquidated damages pursuant to GCC 26, unless an extension of time is agreed upon pursuant to GCC 25.2 without the application of liquidated damages.
26.	**Liquidated Damages**	26.1	Subject to GCC Clause 28, if the Supplier fails to deliver any or all of the Goods or to perform the Services within the period(s) specified in the Contract, the Procuring Entity shall, without prejudice to its other remedies under the Contract, deduct from the Contract Price, as liquidated damages, a sum equivalent to the percentage specified in **SCC** of the delivered price of the delayed Goods or unperformed Services for each week or part thereof of delay until actual delivery or performance, up to a maximum deduction of the performance security specified in **SCC**. Once the said maximum is reached, the Procuring Entity may consider termination of the Contract pursuant to GCC Clause 26.
27.	**Termination for Default**	27.1	The Procuring Entity or the Supplier, without prejudice to any other remedy for breach of Contract, by written notice of default sent to the concerned party may terminate the Contract if the other party causes a fundamental breach of the Contract.
		27.2	Fundamental breaches of Contract shall include, but shall not be limited to the following:
			a) the Supplier fails to deliver any or all of the Goods within the period(s) specified in the Contract, or within any

				extension thereof granted by the Procuring Entity pursuant to GCC Clause 24; or
			b)	the Supplier fails to perform any other obligation(s) under the Contract;
			c)	Supplier's failure to submit performance security within the time stipulated in the SCC;
			d)	the supplier has abandoned or repudiated the contract.
			e)	The Procuring Entity or the Supplier is declared bankrupt or goes into liquidation other than for a reconstruction or amalgamation;
			f)	a payment is not paid by the Procuring Entity to the Supplier after 84 days from the due date for payment;
			g)	the Procuring Entity gives Notice that goods delivered with a defect is a fundamental breach of Contract and the Supplier fails to correct it within a reasonable period of time determined by the Procuring Entity; and
			h)	if the Procuring Entity determines, based on the reasonable evidence, that the Supplier has engaged in corrupt, coercive, collusive, obstructive or fraudulent practices, in competing for or in executing the Contract.
			For the purpose of this clause:	

			"corrupt practice means the offering, giving receiving or soliciting of anything of value to influence the action of a public officer in the procurement process or contract execution; "coercive practice" means impairing or harming, or threatening to impair or harm directly or indirectly, any party or the property of the party for the purpose of influencing improperly the action or that party in connection with public procurement or in furtherance of corrupt practice or fraudulent practice; "collusive practices" means impairing or harming, or threatening to impair or harm directly or indirectly, any part or the property of the Party for the purpose of influencing improperly the action or a part or in connection with public procurement or government contracting or in furtherance of a corrupt practice or a Fraudulent Practice "fraudulent practice" means a misrepresentation of facts in order to influence a procurement process or the execution of a contract to the detriment of the Procuring Entity and includes collusive practices among Suppliers, prior to or after submission designed to establish tender prices at artificial non-competitive levels and to deprive the Procuring Entity of the benefits of free and open competition; "obstructive practice" means acts intended to materially impede access to required information in exercising a duty under this Contract;
		27.4	In the event the Procuring Entity terminates the Contract in whole or in part, pursuant to GCC Clause 26.1, the Procuring Entity may procure, upon such terms and in such manner as it deems appropriate, Goods or Services similar to those undelivered, and the Supplier shall be liable to the Procuring Entity for any excess costs for such similar Goods or Services. However, the Supplier shall continue performance of the Contract to the extent not terminated.

28.	**Force Majeure**	28.1	Notwithstanding the provisions of GCC Clauses 25, 26, and 27, neither Party shall have any liability or be deemed to be in breach of the Contract for any delay nor is other failure in performance of its obligations under the Contract, if such delay or failure is a result of an event of Force Majeure. For purpose of this clause, "Force Majeure" means an event which is beyond the reasonable control of a Party, is not foreseeable, is unavoidable, and its origin is not due to negligence or lack of care on the part of a Party, and which makes a Party's performance of its obligations hereunder impossible or so impractical as reasonably to be considered impossible in the circumstances, and includes, but is not limited to, war, riots, civil disorder, earthquake, fire, explosion, storm, flood, epidemics, or other adverse weather conditions, strikes, lockouts or other industrial action (except where such strikes, lockouts or other industrial action are within the power of the Party invoking Force Majeure to prevent
		28.2	If a Party (hereinafter referred to as "the Affected Party") is or will be prevented from performing its substantial obligation under the contract by Force Majeure, it shall give a Notice to the other Party giving full particulars of the event and circumstance of Force Majeure in writing or in electronic forms that provide record of the content of communication of such condition and the cause thereof. Unless otherwise directed by the Procuring Entity in writing or in electronic forms that provide record of the content of communication, the Supplier shall continue to perform its obligations under the Contract as far as is reasonably practical, and shall seek all reasonable alternative means for performance not prevented by the Force Majeure event.

29.	**Termination for**	29.1	The Procuring Entity may at any time terminate the Contract by giving written notice to the [illegible]

		31.3	If either Party is dissatisfied with the Adjudicator's decision may, within days specified in the SCC refer the dispute for arbitration. If either party within the period mentioned in the SCC has not referred the matter for arbitration the decision shall become final and binding to the Parties.	
32.	**Procedure for Disputes**	32.1	The arbitration shall be conducted in accordance with the arbitration procedure published by the Institution named and in the place shown in the **SCC**.	
		32.2	The rate of the Adjudicator's fee and administrative costs of adjudication shall be borne equally by the Parties. The rates and costs shall be in accordance with the rules of the Appointing Authority. In conducting adjudication to its finality each party shall bear its incurred costs and expenses..	
		32.3	The arbitration shall be conducted in accordance with the arbitration procedure published by the institution named and in the place shown in the **SCC**.	
33.	**Replacement of Adjudicator**	33.1	Should the Adjudicator resign or die, or should the Employer and the Supplier agree that the Adjudicator is not functioning in accordance with the provisions of the contract, a new Adjudicator will be appointed by the Appointing Authority.	
34.	**Limitation of Liability**	34.1	Except in cases of criminal negligence or willful conduct, and in the case of infringement pursuant to GCC 8,	
			a)	The supplier shall not be liable to the Procuring Entity, whether in contract, tort, or otherwise, for any indirect or consequential loss or damage, loss of use, loss of production, or loss of profits or interest costs, provided that this exclusion shall not apply to any obligation of the Supplier to pay liquidated damages to the Procuring Entity; and
			b)	The aggregate liability of the Supplier to the Procuring Entity, whether under the Contract, in tort or otherwise, shall not exceed the total Contract Price, provided that this limitation shall not apply to the cost of repairing or replacing defective equipment or to any obligation of the Supplier to indemnify the Procuring Entity with respect to patent

			infringement..
35.	**Notices**	35.1	Any notice given by one party to the other pursuant to this Contract shall be sent to the other party in writing or in electronic forms that provide record of the content of communication and confirmed in writing or in electronic forms that provide record of the content of communication to the other party's address specified in **SCC**.
		35.2	A notice shall be effective when delivered or on the notice's effective date, whichever is later.
36.	**Taxes and Duties**	36.1	A foreign Supplier shall be entirely responsible for all taxes, stamp duties, license fees, and other such levies imposed outside the United Republic of Tanzania.
		36.2	If any tax exemptions, reductions, allowances or privileges may be available to the Supplier in the United Republic of Tanzania the Procuring Entity shall use its best efforts to enable the Supplier to benefit from any such tax savings to the maximum allowable extent.
		36.3	A local Supplier shall be entirely responsible for all taxes, duties, license fees, etc., incurred until delivery of the contracted Goods to the Procuring Entity.

LETTER OF ACCEPTANCE

MANTRAC CAT

17/01/2022

Your Reference number: AF.158/570/01-C/81

The Conservation Commissioner,
Ngorongoro Conservation Area Authority,
P.O.BOX 1,
Ngorongoro Crater.

Dear Sir/Madam

RE: LETTER OF ACCEPTANCE FOR TENDER NO. AE/055/2021-22/HQ/TCRP/G/01 LOT 1 SUPPLY OF ONE (1) UNIT WHEEL EXCAVATOR.

Please refer to your letter with reference number **AF.158/570/01-C/81** dated 13th January 2022.

We acknowledge receipt of the letter of acceptance to tender bid which was released online through TANePS. By this letter we also confirm the mentioned contract price of **Tanzania Shillings Six Hundred Seventy-Six Million Four Hundred Ninety-Four Thousand Only (TZS. 676,494,000.00)** VAT Inclusive for the delivery time of four (4) months based on the agreement.

Thanking you in advance,

Yours sincerely

For Mantrac Tanzania Limited

.....

Butwa Godluck Sanga

General Manger Machine Sales

MANTRAC (T) LTD.
P. O. Box 9761
DAR-ES-SALAAM

MANTRAC
Plot 4A Nyerere Road
P.O. Box 9762
Dar es Salaam
Tel : +(255) 22 286 0160/1/2
Fax : +(255) 22 286 4284
Email : mantrac@mantrac.co.tz

MANTRAC
Plots 60 & 61, Nyakato Road
P.O Box 433
Mwanza
Tel : +(255) 28 257 2205
Fax : +(255) 28 257 0363
Email : mwanza@mantrac.co.tz

MANTRAC
Plot 5,Boma Road
P.O. Box 543
Moshi
Tel : +(255) 27 275 1711
Fax : +(255) 27 275 1709
Email : moshi@mantrac.co.tz

MANTRAC
Century Plaza, Plot No. 2A
Block D, Mafiat, Mwanjelwa
P.O Box 1716 Mbeya
Tel : + (255) 25 250 0002
Fax : + (255) 25 250 0883
Email : mbeya@mantrac.co.tz

MANTRAC
Plot 122, Block J
P.O Box 277
Mirerani
Tel : + (255) 23 233 4886
Fax : + (255) 23 233 4004
Email : mirerani@mantrac.co.tz

THE UNITED REPUBLIC OF TANZANIA

MINISTRY OF NATURAL RESOURCES AND TOURISM

NGORONGORO CONSERVATION AREA AUTHORITY

In reply please quote:

Ref. No. AF.158/570/01-C/81

Date: 13th January, 2022

M/S MANTRAC TANZANIA LTD,
P.O. Box 9262,
DAR ES SALAAM
Email: mantrac@mantractanzania.com

RE: **LETTER OF ACCEPTANCE FOR TENDER NO. AE/055/2021-22/HQ/TCRP/G/01 LOT 1 SUPPLY OF ONE (1) UNIT WHEEL EXCAVATOR**

Please refer to the above subject matter,

2. This is to inform you that, NCAA Tender Board in its extra ordinary meeting held on 11th January, 2022 approved your bid which you submitted online through TANePS and opened on Friday 07th January, 2022 in regard to above mentioned tender for a contract price of **Tanzania Shillings Six Hundred Seventy Six Million Four Hundred Ninety Four Thousand Only (TZS. 676,494,000.00)** VAT inclusive for a delivery period of four (4) months after signing of the contract.

3. The terms and conditions of the contract are as per invitation for tender

Dr. Christopher D. Timbuka
Acting **CONSERVATION COMMISSIONER**

Headquarters: P. O. Box1, NgorongoroCrater.Tel: +255-27-2537006/19
Conservation Commissioner Office: Tel:+255-27-2537046
E-Mail: cc@ncaa.go.tz Website: www.ncaa.go.tz
Liaison Office: P.O. Box776ArushaTel:+255-27-2503339
Information Office: Tel:+255-27-2544625

All official correspondence should be addressed to The Conservation Commissioner

c.c. The Chief Executive Officer,
Public Procurement Regulatory Authority,
Kambarage Tower, 9th Floor PSPF Road,
P.O. Box 2865,
DODOMA, TANZANIA.
Email: ceo@ppra.go.tz

: The Controller and Auditor General,
P.O. Box 9080,
DAR ES SALAAM.
Email: ocag@nao.go.tz

: Attorney General
P.O. Box 9050,
DAR ES SALAAM.
Email: info@agctz.go.tz

: Internal Auditor General
P.O. Box 911
DAR ES SALAAM.
Fax: +25522211032

: Permanent Secretary , Ministry of Finance and Planning,
(Att. Directorate of Government Asset Management Division)
18 Jakaya Kikwete Road
P.O. Box 2802
40468 DODOMA.
Email: assets.management@mof.go.tz

: Tanzania Revenue Authority
P.O. Box 11491
DAR ES SALAAM.
Email: services@tra.go.tz

SCHEDULE OF REQUIREMENTS AND PRICE

MANTRAC
Plot 4A Nyerere Road
P.O. Box 9762
Dar es Salaam
Tel : +(255) 22 286 0160/12
Fax : +(255) 22 286 4284
Email : mantrac@mantrac.co.tz

MANTRAC
Plots 60 & 61, Nyasaka Road
P.O.Box 433
Mwanza
Tel : +(255) 28 257 2205
Fax : +(255) 28 257 0353
Email : mwanza@mantrac.co.tz

MANTRAC
Plot 5, Boma Road
P.O. Box 543
Moshi
Tel : +(255) 27 275 1711
Fax : +(255) 27 275 1709
Email : moshi@mantrac.co.tz

MANTRAC
Century Plaza, Plot No. 2A
Block D, Mafiat, Mwanjelwa
P.O Box 1718 Mbeya
Tel : +(255) 25 250 0992
Fax : +(255) 25 250 0993
Email : mbeya@mantrac.co.tz

MANTRAC
Plot 122, Block J
P.O Box 277
Mtwara
Tel : +(255) 23 233 4685
Fax : +(255) 23 233 4684
Email : mtwara@mantrac.co.tz

MANTRAC CAT

Price Schedule: Goods Manufactures Outside United Republic of Tanzania, already Imported

1	2	3	4	5	6	7	8	9	10	11	12
Line item No.	Description	Country of origin	Delivery date as defined by incoterms	Quantity Physical unit	Unit Price Including Custom duties & Import Taxes Paid (TZS)	Custom duties and Import Taxes paid (TZS)	Unit Price net of custom duties and taxes (Col 6 minus Col 7) (TZS)	Price per line item of customer duties and import Taxes Paid (col 5x8) (TZS)	Price Per Line item for inland transportation and other services required in the procuring Entity's country to convey the goods to their final destination (TZS)	Sales and other taxes paid or payable per item if contract is award (18% VAT) (TZS)	Total Price Per Line Item (Col 9+10) (TZS)
1	Wheel Excavator Cat M317D2	CHINA	4 Months	1	573,300,000	0	573,300,000	573,300,000	TZS Included in Col 9	676,494,000	573,300,000
										Grand Total Selling Price without VAT 18%	573,300,000

Name **Butwa Godluck Sanga** in the capacity of **General Manager Machine Sales**

MANTRAC (T) LTD
P. O. Box 9764
DAR ES SALAAM

Signature of Tenderer: _____

Duly authorized to sign the Tender for and on behalf of **Mantrac Tanzania Limited**

Dated on **6th** day of **January 2022**

Note: In case of discrepancy between unit price and total, the unit price shall prevail.

MANTRAC CAT

The Offered price includes the followings for each machine:

1. Machines each as specified
2. 12 Months or 2000Hrs whichever comes first, dry CSA parts
3. 24months or 4000hours extended warranty
4. Transportation to the final destination
5. Operators training for one week
6. 12months Vision Link Subscription

MANTRAC
Plot 4A Nyerere Road
P.O. Box 9762
Dar es Salaam
Tel : +(255) 22 286 0160/1/2
Fax : +(255) 22 286 4284
Email : mantrac@mantrac.co.tz

MANTRAC
Plots 60 & 61, Nyakato Road
P.O.Box 433
Mwanza
Tel : +(255) 28 257 2205
Fax : +(255) 28 257 0353
Email : mwanza@mantrac.co.tz

MANTRAC
Plot 5 Boma Road
P.O. Box 543
Moshi
Tel : +(255) 27 275 1711
Fax : +(255) 27 275 1709
Email : moshi@mantrac.co.tz

MANTRAC
Century Plaza, Plot No. 2A
Block D, Mafiat, Mwanjelwa
P.O.Box 1718 Mbeya
Tel : + (255) 25 250 0992
Fax : + (255) 25 250 0993
Email : mbeya@mantrac.co.tz

MANTRAC
Plot 122, Block J
P.O.Box 277
Mtwara
Tel : + (255) 23 233 4685
Fax : + (255) 23 233 4684
Email : mtwara@mantrac.co.tz

MANTRAC CAT

PAYMENT TERMS:

Payment for Goods and Services supplied from within the United Republic of Tanzania shall be made in Tanzanian Shillings, as follows:

1. Advance Payment: 15 percent of the Contract Price shall be paid within thirty (30) days of signing of the Contract against a simple receipt and a bank guarantee for the equivalent amount and in the form provided in the Tendering Documents or another form acceptable to the PE.
2. On Delivery: 80 percent of the Contract Price shall be paid within 30days upon receipt of the Goods and upon submission of tax invoice and delivery note
3. On Acceptance: The remaining 5 percent of the Contract Price shall be paid to the Supplier within thirty (30) days after the date of the acceptance certificate for the respective delivery issued by the PE.

MANTRAC
Plot 4A Nyerere Road
P.O. Box 9762
Dar es Salaam
Tel : +(255) 22 286 0160/1/2
Fax : +(255) 22 286 4294
Email : mantrac@mantrac.co.tz

MANTRAC
Plots 60 & 61, Nyakato Road
P.O.Box 433
Mwanza
Tel : +(255) 28 257 2205
Fax : +(255) 28 257 0353
Email : mwanza@mantrac.co.tz

MANTRAC
Plot 5 Boma Road
P.O. Box 543
Moshi
Tel : +(255) 27 275 1711
Fax : +(255) 27 275 1709
Email : moshi@mantrac.co.tz

MANTRAC
Century Plaza, Plot No. 2A
Block D. Mafiat, Mwanjelwa
P.O Box 1718 Mbeya
Tel : + (255) 25 250 0992
Fax : + (255) 25 250 0993
Email : mbeya@mantrac.co.tz

MANTRAC
Plot 122, Block J
P.O.Box 277
Mlwara
Tel : + (255) 23 233 4685
Fax : + (255) 23 233 4684
Email : mlwara@mantrac.co.tz

CERTIFICATE OF CONTRACT COMMENCEMENT

THE UNITED REPUBLIC OF TANZANIA

MINISTRY OF NATURAL RESOURCES AND TOURISM

NGORONGORO CONSERVATION AREA AUTHORITY

In reply please quote:

Ref.No. AF.158/570/01-C/86

Date: 22th January,2022

M/S MANTRAC TANZANIA LTD,
P.O. Box 9262,
DAR ES SALAAM
Email: mantrac@mantractanzania.com

RE: COMMENCEMENT OF CONTRACT NO.AE/055/2021-22/HQ/TCRP/G/01 LOT 1 SUPPLY OF ONE (1) UNIT WHEEL EXCAVATOR

Please make reference to the above subject.

Ngorongoro Conservation Area Authority (NCAA) entered into contract with your company on 20 January, 2022 for Supply of one (1) unit Wheel Excavator for delivery period of four (4) months where by the price of this contract is fixed.

Following this contract NCAA would like to inform you that, the commencement date of this contract will start on Thursday 20th January, 2022 and is expected to elapse on Friday 20 May,2022.

We wish you good luck in accomplishing the assignment within this time while adhering on quantity and quality as stipulated in the contract.

Dr. Christopher D. Timbuka
Ag. **CONSERVATION COMMISSIONER**

Headquarters :P. O. Box1,NgorongoroCrater.Tel: +255-27-2537006/19
Conservation Commissioner Office :Tel:+255-27-2537046
E-Mail :cc@ncaa.go.tz Website :www.ncaa.go.tz
Liaison Office :P.O. Box776ArushaTel:+255-27-2503339
Information Office :Tel:+255-27-2544625

All official correspondence should be addressed to The Conservation Commissioner

TECHNICAL SPECIFICATIONS

TECHNICAL SPECIFICATIONS FOR SUPPLY OF ONE (1) UNIT WHEEL EXCAVATOR

1.0 GENERAL

The Wheel Excavator shall be new unused not more than 12 months from date of manufacture and incorporating recent technological development in manufacturer.

0.0 DIMENSIONS AND WEIGHTS

i. Shipping height (with bucket) not more than 3200mm
ii. Shipping Length not more than 9500mm
iii. Track width not more than 3600
iv. Tail swing radius not more than 2800
v. Ground clearance about 400mm
vi. Cab height not more than 3200mm
vii. Variable adjustable boom about 5.26mm
viii. One piece boom about 5.35m
ix. Maximum digging depth not less than 4000 mm
x. Maximum cutting height not less than 8000mm
xi. Maximum loading height about 3000mm
xii. Bucket capacity 0.35-1.30 m^3
xiii. Dozer width /height about 2450/570mm
xiv. Operating weight not more than 21,000kg

3.0 ENGINE

3.1 Diesel engine
3.2 4-strokes turbo charged with displacement not less than 6.0 L
3.3. Water cooled developing not less than 140 hp (103 kW)
3.4 Automatic engine speed control

4.0 DRIVE

a) Planetary power shift transmission 4WD with two forward and reverse speed travels.
b) Maximum travel speed is 40km/h
c) Variable shift control to be provided

(e) Front or rear mounted outriggers.
(f) Dozer blade front or rear mounted

15.0 WARRANTY

The manufacturer shall provide warranty certificate (booklet) which should over 24 months of 6,000 hours whichever comes first. During this period any defects not coursed by negligence of the operator on any component of the equipment shall be rectified by the supplier free of charge. Where repeated detects indicate a weakness in design, materials or workmanship, the supplier may be required to make replacement with genuine parts within the warrant period.

15.0 MANUALS AND PARTS CATALOGUE

The following manuals, all in English language of current edition including any amendments shall be supplied together with the wheel excavator

2 No. illustrated Workshop Manuals for the Wheel excavator

2 No. illustrated Workshop Manuals for the Wheel excavator

Necessary kit with tools for minor repair, Spare Parts catalogue with exploded diagrams for parts identifications .Drawing , wiring and piping diagrams.

15.0 TRAINING

The supplier/manufacturer shall provide specialized training to operators on the correct usage of the Excavator.

MANTRAC CAT

06th January 2022

Conservation Commissioner,

Ngorongoro Conservation Area Authority,

P.O Box 1, Ngorongoro Crater,

Arusha, Tanzania.

Dear Sir/Madam

RE: COMMITMENT LETTER FOR OFFERED MACHINE SPECIFICATION

Refer to the heading above

By this letter we Mantrac Tanzania Limited, we commit that the specifications offered on **Supply of One (1) Unit Wheel Excavator** in attached technical offer against tender number **AE/055/2021 - 22/HQ/TCRP/G/01 LOT-1**, will be delivered the same with no alterations.

Yours Sincerely

Supply of

For Mantrac Tanzania Limited

MANTRAC (T) LTD. P. O. Box 9262 DAR ES SALAAM

Butwa Godluck Sanga

General Manager Machine Sales

MANTRAC
Plot 4A Nyerere Road
P.O. Box 9262
Dar es Salaam
Tel : +(255) 22 286 0160/1/2
Fax : +(255) 22 286 4294
Email : mantrac@mantrac.co.tz

MANTRAC
Plots 60 & 61, Nyakato Road
P.O Box 433
Mwanza
Tel : +(255) 28 257 2295
Fax : +(255) 28 257 0360
Email : mwanza@mantrac.co.tz

MANTRAC
Plot 5 Bima Road
P.O. Box 543
Moshi
Tel : +(255) 27 275 1711
Fax : +(255) 27 275 1709
Email : moshi@mantrac.co.tz

MANTRAC
Century Plaza Plot No. 2A
Block D, Mafiat, Mwanjelwa
P.O Box 1718 Mbeya
Tel : + (255) 25 250 0992
Fax : + (255) 25 250 0993
Email : mbeya@mantrac.co.tz

MANTRAC
Plot 122, Block J
P O Box 277
Mtwara
Tel : + (255) 23 233 4685
Fax : + (255) 23 233 4684
Email : mtwara@mantrac.co.tz

WHEEL EXCAVATOR

SN		SPECIFICATION REQUIRED	CAT 317D2	COMPLY/ NOT COMPLY
1	GENERAL			
	1.1	The wheel exavator shall be new, not more than 12 moths from date of manufacture and incorporating recent technological development in manufacturer	Brand New	COMPLY
2	DIMENSIONS AND WEIGHTS			
	2.1	Shipping height (with bucket) not more than 3200 mm	3150 mm	COMPLY
	2.2	Shipping Length not more than 9500 mm	8480 mm	COMPLY
	2.3	Track width not more than 3600	2550 mm	COMPLY
	2.4	Tail Swing radius not more than 2800	2210 mm	COMPLY
	2.5	Ground Clearence about 400 mm	370 mm	COMPLY
	2.6	Cab height not more than 3200 mm	3150 mm	COMPLY
	2.7	Variable adjustable boom about 5.26 m	5.20 m	COMPLY
	2.8	One piece boom about 5.35m	5.0 m	COMPLY
	2.9	Maxinun digging depth not less than 4000 mm	5890 mm	COMPLY
	2.10	Maximum cutting height not less than 8000 mm	10,230 mm	COMPLY
	2.11	Maximum loading height about 3000 mm	7140 mm	COMPLY
	2.12	Bucket capacity 0.35 - 1.30 m3	0.8 m3	COMPLY
	2.13	Operating weight not more than 21,000 kg	17,500 kg	COMPLY
3	ENGINE			
	3.1	Diesel engine	Diesel Engine	COMPLY
	3.2	4- strokes, turbo changed , with displacement not less than 6.0 L	4.4 L , with 4 cylinders	COMPLY
	3.3	Water cooled developing not less than 140 HP (103 kW)	147 HP (108 kW)	COMPLY
	3.4	Automatic engine speed control	Automatic engine speed control, including One-Touch Low Idle	COMPLY
4	DRIVE			
	a	Planetary Power Shift transmission 4WD with two forward and reverse speed Tra	AWD	COMPLY
	b	Maximum travel speed is 40km/h	34 km / h	Very closer to compliance
	c	Variable shift control to be provided to match various machine application	Available	COMPLY
	d	Maximum drawbar pull about 100kn	about 98 kN	COMPLY
5	SWING MECHANISM			
	a	Swing speed about 13 rpm	9 rpm	COMPLY
	b	Swing Torque about 62 knm	42 kN	COMPLY
6	HYDRAULICS SYSTEM			COMPLY
	a	Main system maximum flow about 2 x 205 l/min	220 L/min	COMPLY
	b	Maximum pressure at normal travel about 350 Bar	350 bar	COMPLY
	c	Maximum Pressure at Swing about 250 Bar	370 bar	COMPLY
	d	Pilot system Maaximum flow not less than 32.0 L / min . Pilot system maximum pressure about 39 Bar		COMPLY
7	TIRE SIZES			
	a	Standard 10.00 - 20 (dual Pneumatic or it's equvalent)	10.00-20 (dual pneumatic)	COMPLY
8	BRAKE SYETEM			COMPLY
	a	Meet creterion SAE J/ ISO 10265 MAY 1999		COMPLY
	b	Automatic Swing parking brake	Automatic swing brake	COMPLY
9	SERVICE REFILL CAPACITIES			
	a	Fuel Tank not less than 300 L with a lockable cap	240 L	COMPLY
	b	Cooling system not less than 25 L	33 L	COMPLY
	c	Engine crankcase not less than 30 L	8 L	COMPLY
	d	Hydraulic system not less than 260L	255 L	COMPLY

e	Swing Drivers (each) not less than 8 L		COMPLY
f	Final Drive (each) not less than 10 L	2.5 L	Better and cost serving
g	Hydraulic Tank not less than 120L with a lockable Cap	135 L	COMPLY

M317D2
Wheeled Excavator



Engine	
Engine Model	Cat® C4.4 ACERT™ Technology
Emission Standards	China Nonroad Stage III emission standards equivalent to U.S. EPA Tier 3 and EU Stage IIIA
Net Power (Maximum) ISO 9249 at 2,000 rpm	101 kW (137 hp)
Net Power (Maximum) ISO 14396 at 2,000 rpm	108 kW (147 hp)

Weights (absolute min-max)	
Operating Weight with Work Tool	15 300 to 17 500 kg
Bucket Specifications	
Bucket Capacities	0.35 to 0.91 m^3
Working Ranges	
Maximum Reach at Ground Level	9380 mm
Maximum Digging Depth	6090 mm
Drive	
Maximum Travel Speed	34 kph

Features

Performance

Provides fast cycle times, great lift capacity and high bucket and stick forces. The new engine offers great power and reliability, while optimizing your fuel consumption. This combination maximizes your efficiency in any job to maximize your profits.

Serviceability

For increased safety and reduced downtime, all daily maintenance points are accessible from ground level. Centralized greasing systems allow quicker lubrication of several critical points.

Operator Comfort

The operator station maximizes comfort while increasing safety. The available air-suspension seat with heated cushions improves operator comfort. Safety is enhanced by various integrated features like the color monitor displaying the view from the standard rear-mounted camera.

Versatility

Various undercarriage and front linkage possibilities. See the machine overall performance in different applications, make the most of it thanks to the available optional features and Cat attachments and you'll get the right machine just for your applications' needs.

Contents

Responsible Design 4
Engine 5
Premium Comfort 6
Simplicity and Functionality 7
Undercarriage 8
Hydraulics 9
Booms and Sticks 10
SmartBoom™ 11
Ride Control 11
Attachments 12
Safety 14
Complete Customer Support 14
Serviceability 15
Integrated Technologies 16
Specifications 17
Standard Equipment 26
Optional Equipment 27




CAT
CAT
M317D



Responsible Design

Thinking Generations Ahead

Fuel Efficiency and Low Exhaust Emissions

The Cat C4.4 ACERT engine meets China Nonroad Stage III emission standards, and achieves emission levels equivalent to Tier 3 and Stage IIIA, while offering increased performance, high fuel efficiency and reliability. This means more work done in a day, low operating cost and minimal impact on our environment.

Quiet Operation

Low sound levels, as a result of the variable fan speed and remote cooling system.

Technologies and Longer Service Intervals

Product Link™ allows remote monitoring of the machine and helps improve your fleet efficiency as well as reduce your costs. Your Cat dealer can help extend service intervals, meaning fewer required fluids and disposals, all adding up to lower operating costs.

Fewer Leaks and Spills

Lubricant filters and various drains are designed to minimize spills. Cat O-Ring Face Seals, XT™ Hoses and cylinders help prevent leaks that can reduce performance.

Cat Certified Used

This program is a key element in the range of solutions offered by Caterpillar and Cat dealers throughout the world to help customers achieve growth at the lowest cost while eliminating waste. Used equipment is inspected, guaranteed and ready for work and customers will benefit from a Caterpillar warranty.

Engine
Power, Reliability, and Fuel Economy

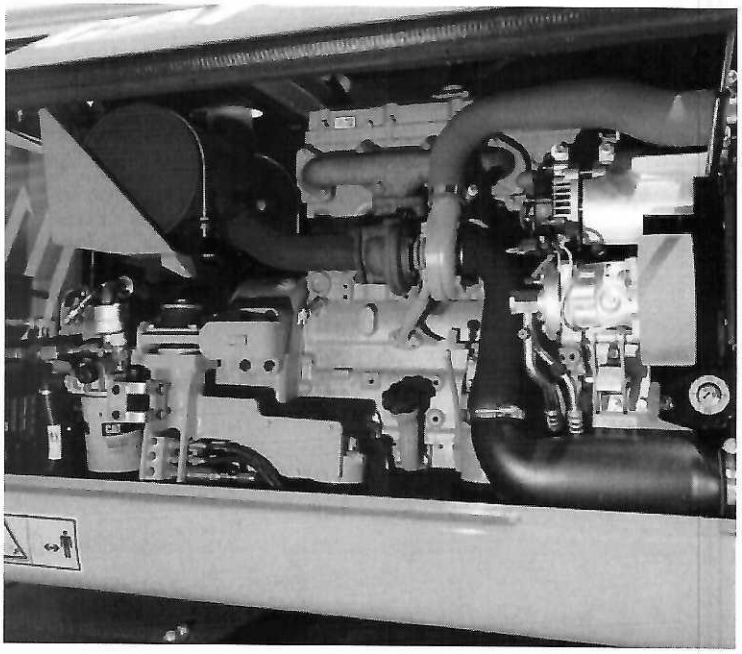

The Power and Performance You Need

Constant Power Strategy

Responding quickly to changing loads, the constant power strategy delivers the same amount of power regardless of operating conditions.

The Cat engine delivers a maximum net power (Acc. ISO 14396) of 108 kW at a rated speed of 2,000 rpm and increases reliability with the enhanced fuel system designed to manage world-wide fuel quality.

On-Demand Strategies for Fuel Efficiency

Smart Engines

The engine is electronically controlled and equipped with the Common Rail Fuel System. Smart engines automatically operate at the most efficient operating point depending on the application, to save fuel with no impact on performance.

Demand Fan Cooling System

The electronically controlled hydraulic motor drives a variable speed on-demand fan, resulting in optimized fuel consumption.

One-Touch Low Idle Control and Automatic Engine Speed Control

The Automatic Engine Speed Control reduces engine speed if no operation is performed, reducing fuel consumption and sound levels. The One-Touch Low Idle Control allows you to instantly reduce the engine speed with one touch.

Eco and Work Modes

- The Eco Mode can reduce significantly your fuel consumption while preserving productivity results for most applications.
- The Travel Mode optimizes driveline performance while preserving fuel.
- The Power Mode is the best compromise between productivity and fuel efficiency for heavy load applications.

Premium Comfort

Keeps Operators Productive All Shift Long



Comfortable Seat Options

Our seats provide all the comfort needed for a long day of work. Test the comfort seat, it includes a passive seat climate control and air suspension which can be adjusted to the operator's weight, allowing relaxed, ergonomic sitting.

Comfortable Operation

- Two-way pedals for travel and auxiliary circuits provide increased floor space.
- The auxiliary high-pressure pedal can be locked in the off position and used as a footrest.
- The steering column is easily tiltable thanks to a large pedal at its base.

Low Vibration/Sound Levels

- Rubber-mounted cab with thick steel tubing to reduce sound levels.
- The air-suspended seat helps reduce vibrations.

Details That Make the Difference

Automatic Climate Control

Easy adjustment of the cab temperature with filtered ventilation to be comfortable in all climates.

Storage Compartments

- Large compartment behind the seat with sufficient room to store a large lunch box or a hard hat. A cover secures the contents during machine operation.
- Several other dedicated spaces can hold large mugs, MP3 players or a cell phone.

Plug, Charge and Play Your Devices

- The 12V-7A power supply socket is conveniently located for charging your laptop, or a tablet.
- A CD/MP3 radio is available.





Simplicity and Functionality

For Ease of Operation

Ergonomic Layout and Smart Controls

The operator station is designed for simplicity, functionality and ease of operation. Frequently used switches are centralized on the right-hand switch console. Features like the heavy lift mode, ride control or SmartBoom will not only increase your productivity but also help reduce fatigue for your operators.

Joystick Steering (optional)

Keep both hands on the joysticks even when simultaneously moving the implements and repositioning the machine, by the use of the slider switch on the right joystick.

Optimized Visibility

All glass is affixed directly to the cab, eliminating the use of window frames. The 70/30 split front windshield stores the upper portion above the operator and is easy to release. A large skylight provides upward visibility and includes a retractable sunscreen. The parallel wiper system covers the entire front windshield.





Standard Rearview Camera

Together with the best in class visibility to all sides, the rear view displayed on the monitor helps ensure a safe operation.

Large Color Monitor – Keeps You Aware of Any Important Information

- Easy to read and in local language, high resolution LCD monitor.
- "Quick Access" buttons allow a quick selection of favorite functions.
- The tool select function lets you preset up to ten different hydraulic attachments for quick tool changes (optional).

Undercarriage

Strength and Versatility on Wheels at 34 kph



High Travel Speed (Maximum 34 kph)

Reduces your travel times between job sites and therefore transportation costs. Save time whenever you need to move material or items inside your job site.



Stabilizers and Blade – Versatile Solutions to Do It All.

Various undercarriage configurations are available to provide the best solution for your work environment including a blade and/or outriggers. Outriggers can be individually controlled to horizontally stabilize the machine even on slight slopes. The new blade design allows material to roll well and minimizes material packing.

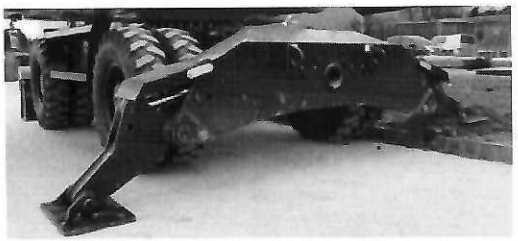

Fenders (optional)

Steel fenders provide coverage of all tires, protecting the machine and surroundings from mud and stones being thrown up.



Heavy Duty Axles

Rigidity and long life with effective transmission protection and heavy-duty axles. The transmission is mounted directly on the rear axle for protection and optimum ground clearance. The front axle offers wide oscillating and steering angles.



Advanced Disc Brake System

Minimizes the rocking effect when working free on wheels. The disc brake system acts directly on the hub instead of the drive shaft to avoid planetary gear backlash. The axle design lowers life costs. Oil change intervals can be up to 2,000 working hours depending on the machine usage.

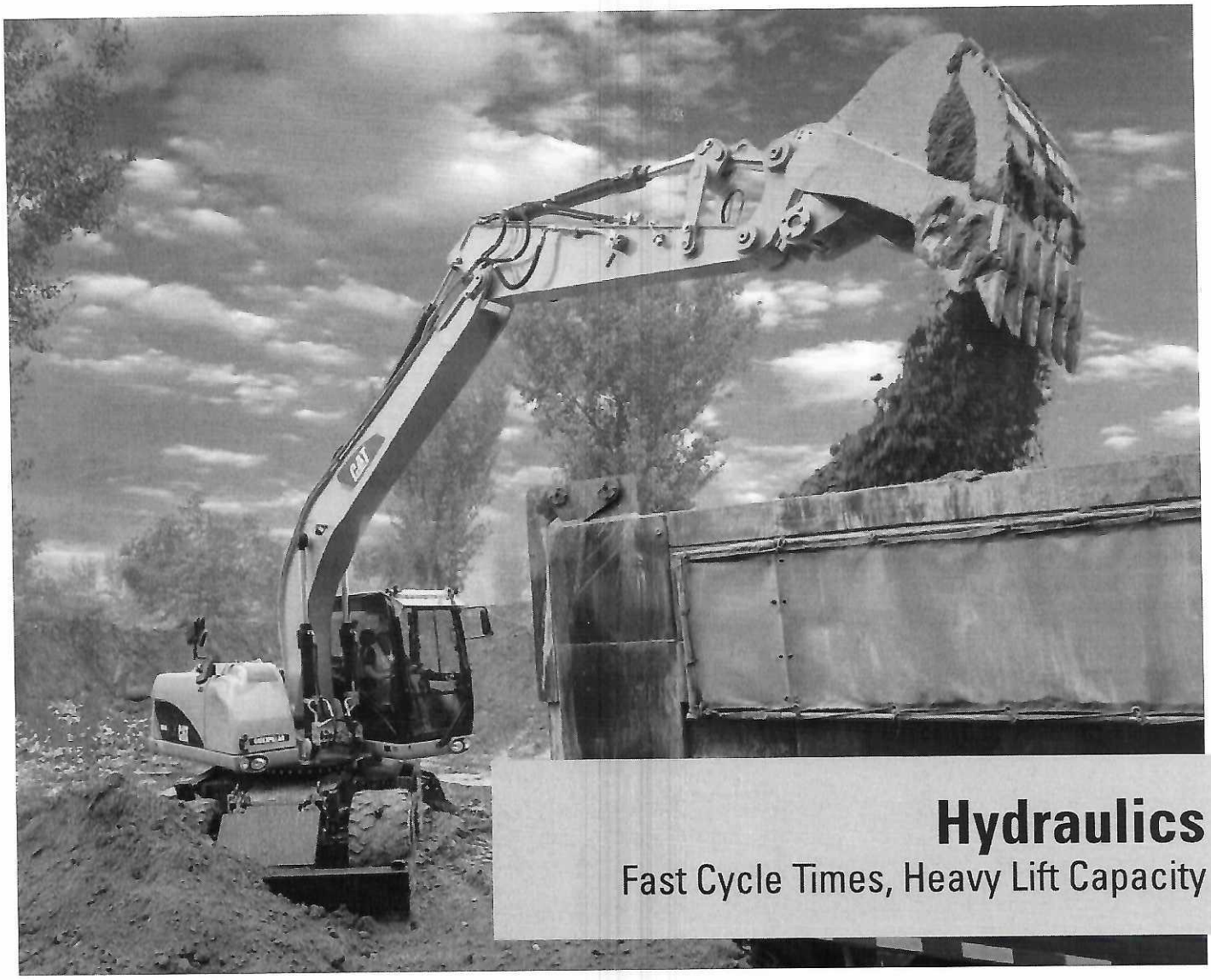

Hydraulics

Fast Cycle Times, Heavy Lift Capacity

Dedicated Swing Pump

This closed hydraulic circuit maximizes swing performance without reducing power to the other hydraulic functions, resulting in smoother combined movements.

Proportional Auxiliary Hydraulics, Tremendous Versatility

The versatility of the hydraulic system can be expanded to utilize a wide variety of hydraulic attachments using multiple valve options. Basic controls include (optional):

- The Multi-Combined Valve allows the operator to select up to ten preset work tools from the monitor.
- A medium pressure function providing proportional flow, ideal for tilting buckets or rotating tools.
- A hammer line (one-way high pressure).
- A dedicated circuit to operate hydraulic quick couplers*.

Heavy Lift Mode

Maximizes your lifting performance by boosting the lifting capacity of the machine up to 7%.

Adjustable Swing Aggressiveness

Allows you to adjust the aggressiveness of the machine swing to match the operator's preferences.

Stick Regeneration Circuit

Increases efficiency and helps enhance controllability for higher productivity.

**Optional offering can differ depending on regions. Contact your Cat dealer for more information.*

Booms and Sticks

Maximum Flexibility – High Productivity



Rugged Performance

Booms and sticks are welded, box section structures with thick, multiplate fabrications in high stress areas for the tough work you do.

Flexibility

The choice of various booms and sticks provides the right balance of reach and digging forces for all applications.

Sticks

- **Medium stick (2400 mm)** for greater crowd force and lifting capability
- **Long stick (2600 mm)** for greater depth and reach

Booms

- **Variable Adjustable Boom (VA)** – improved right side visibility and roading balance. When working in tight areas, close to the machine, against the blade, or lifting heavy loads, the VA boom offers the best flexibility.
- **One-Piece Boom** – Fits best for all standard applications such as truck loading and digging. A unique straight section in the curve of the side plate reduces stress flow and helps increase boom life.



SmartBoom
Reduces Stress and Vibration





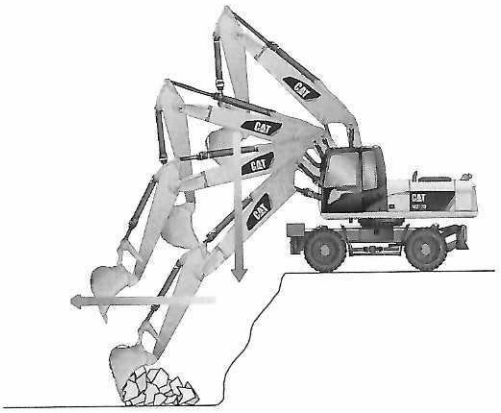

Rock Scraping
Scraping rock and finishing work is easy and fast. SmartBoom simplifies the task and allows more focus on stick and bucket, while the boom freely goes up and down without using pump flow.

Hammer Work
The front parts automatically follow the hammer while penetrating the rock. Blank shots or excessive force on the hammer are avoided resulting in longer life for the hammer and the machine. Similar advantages with vibratory plate compactors.

Truck Loading
Loading trucks from a bench is more productive and fuel efficient as the return cycle is reduced while the boom down function does not require pump flow.

Ride Control
Fast Travel Speed with More Comfort

The ride control system lets you travel faster over rough terrain with improved ride quality for the operator. Accumulators are acting as shock absorbers to dampen the front part motion. It can be activated through a button located on the soft switch panel in the cab.











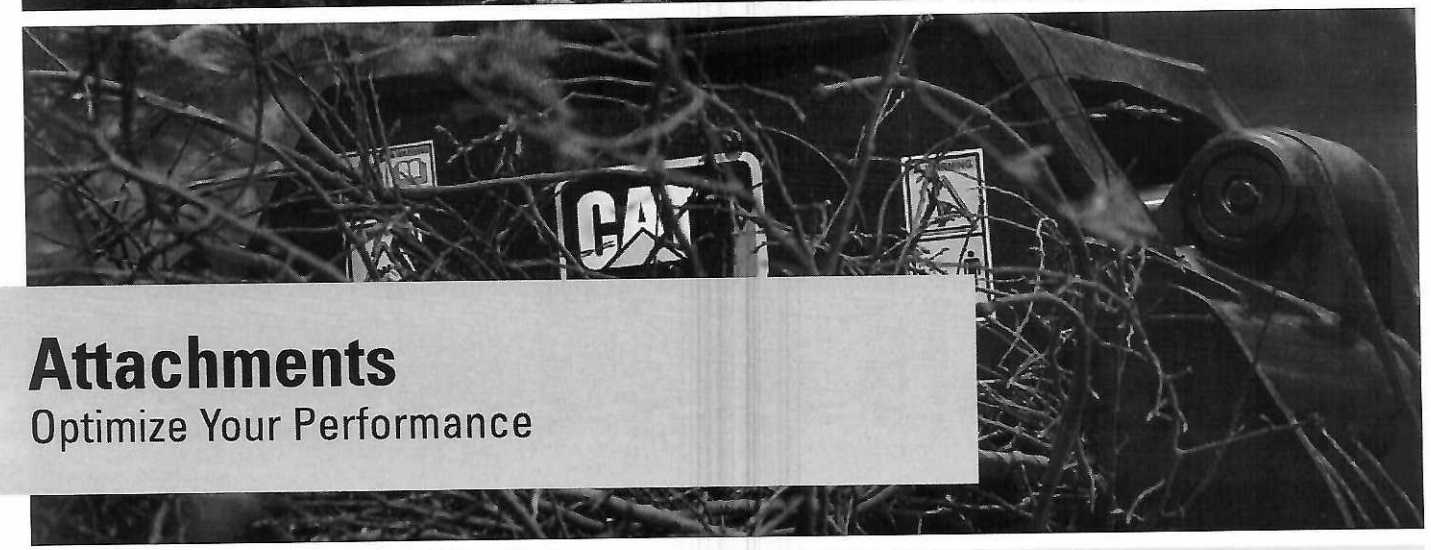

Attachments

Optimize Your Performance

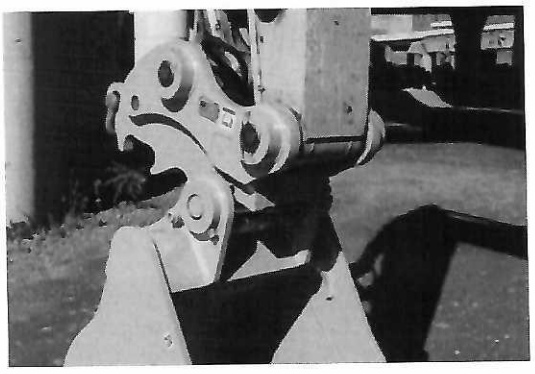

Save Time with Every Tool Change

Perform tool changes in seconds ... Combine a quick coupler with common attachments that can be shared between the same size machines and you'll get flexibility on every job. The hydraulic quick coupler automates tool exchange, so operators can change attachments quickly, from the safety and comfort of their cabs. Make your operators more efficient and productive.



Serviceability
When Uptime Counts

Extended Service Intervals to Reduce Costs

- **S·O·S℠ Oil Sampling Analysis** – Enhances performance and durability. This system can predict potential failures and can extend hydraulic oil change intervals up to 6,000 hours.
- **Engine Oil (low ash oil)** – Cat engine oil is more cost effective and provides industry-leading performance. Engine oil change interval can be extended up to 500 hours.
- **Fuel Filters and Water Separator** – The new filtration system is suited for challenging work conditions, even when using poor fuel quality. The new primary filter offers increased filtration capabilities and works in conjunction with a water separator. Fuel filters are designed to last up to 500 hours (250 hours with very poor fuel quality). The primary fuel filter includes a fuel priming pump, a water level switch and a visual restriction indicator. Two secondary filters further improve filtration capabilities.
- **Remote Greasing** – Centralized or grouped points for hard to reach locations.
- **Refueling Pump** (optional).

Easy Ground Level Maintenance

Our excavators are designed with the operator and technician in mind. Door opening is assisted with gaz springs.

- **Front Compartment** – Ground level access to the batteries, air-to-air aftercooler, air conditioner condenser and the air cleaner filter.
- **Swing-out Air Conditioner Condenser** allows cleaning on both sides and access to the air-to-air aftercooler.
- **Engine Compartment** – The longitudinal layout ensures accessibility from ground level.

Integrated Technologies
It Pays to Know



Cat Connect makes smart use of technology and services to improve your job site efficiency. Using the data from technology-equipped machines, you'll get more information and insight into your equipment and operations than ever before.

Cat Connect technologies offer improvements in these key areas:

EQUIPMENT MANAGEMENT

Equipment Management – increase uptime and reduce operating costs.

PRODUCTIVITY

Productivity – monitor production and manage job site efficiency.

SAFETY

Safety – enhance job site awareness to keep your people and equipment safe.



Featured Cat Connect technologies include the following:

Link

Link technologies provide wireless capability to machines to enable two-way transfer of information collected by on-board sensors, control modules, and other Cat Connect technologies.

Manage Your Machine Remotely

Cat Product Link is a system that is deeply integrated into the machine monitoring system to take the guesswork out of managing your equipment. The system tracks location, hours, fuel usage, productivity, idle time, and diagnostic codes and shares it with you through VisionLink® to help you maximize efficiency, improve productivity, and lower operating costs.

CAT® CONNECT

EQUIPMENT MANAGEMENT | PRODUCTIVITY | SAFETY | SUSTAINABILITY

M317D2 Wheeled Excavator Specifications

Engine

Engine Model	Cat C4.4 ACERT
Emission Standards	Meets China Nonroad Stage III emission standards, equivalent to Tier 3 and Stage IIIA
Ratings	2,000 rpm
Net Power (metric)	
ISO 14396	108 kW (147 hp)
ISO 9249/SAE J1349	101 kW (137 hp)
Bore	105 mm
Stroke	127 mm
Displacement	4.4 L
Cylinders	4
Maximum Torque at 1,400 rpm	550 N·m

- All engine horsepower (hp) are metric including front page.
- Full engine net power up to 3000 m altitude.

Weights

VA Boom*	
Rear Blade Only	15 840 kg
Front Blade, Rear Outriggers	16 790 kg
One-Piece Boom*	
Rear Blade Only	15 340 kg
Front Blade, Rear Outriggers	16 290 kg
Sticks	
Medium (2400 mm)	514 kg
Long (2600 mm)	530 kg
Blade	750 kg
Outriggers	960 kg
Counterweight	
Standard	3500 kg
Optional	3900 kg

* Machine weight with medium stick, 3900 kg counterweight, with operator and full fuel tank, without work tool. Weight varies depending on configuration.

Transmission

Forward/Reverse	
1st Gear	8 kph
2nd Gear	34 kph
Creeper Speed	
1st Gear	3 kph
2nd Gear	13 kph
Drawbar Pull	97 kN
Maximum Gradeability at 16 500 kg	69% (44°)

Tires

Standard	10.00-20 (dual pneumatic)

Hydraulic System

Tank Capacity	135 L	
System	255 L	
Maximum Pressure		
Implement Circuit		
Normal	350 bar	35 000 kPa
Heavy Lift	375 bar	37 500 kPa
Travel Circuit	350 bar	35 000 kPa
Auxiliary Circuit		
High Pressure	350 bar	35 000 kPa
Medium Pressure	185 bar	18 500 kPa
Swing Mechanism	370 bar	35 000 kPa
Maximum Flow		
Implement/Travel Circuit	220 L/min	
Auxiliary Circuit		
High Pressure	220 L/min	
Medium Pressure	40 L/min	
Swing Mechanism	78 L/min	

M317D2 Wheeled Excavator Specifications

Swing Mechanism

Maximum Swing Speed	9 rpm
Maximum Swing Torque	42 kN·m

Undercarriage

Axle Clearance	370 mm
Maximum Steering Angle	35°
Oscillation Axle Angle	±8.5°
Minimum Turning Radius	
Outside of Tire	6300 mm
End of VA Boom	6900 mm
End of One-Piece Boom	8300 mm

Service Refill Capacities

Fuel Tank	240 L
Cooling	33 L
Engine Crankcase	8 L
Rear Axle Housing (differential)	14 L
Front Steering Axle (differential)	10.5 L
Final Drive	2.5 L
Powershift Transmission	2.5 L

Sound Levels

Exterior Sound

- The labeled spectator sound power level measured according to the test procedures and conditions specified in 2000/14/EC is 102 dB(A).

Cab/FOGS

- Cab with Falling Object Guard Structure (FOGS) meets ISO 10262.

Dimensions

All dimensions are approximate.

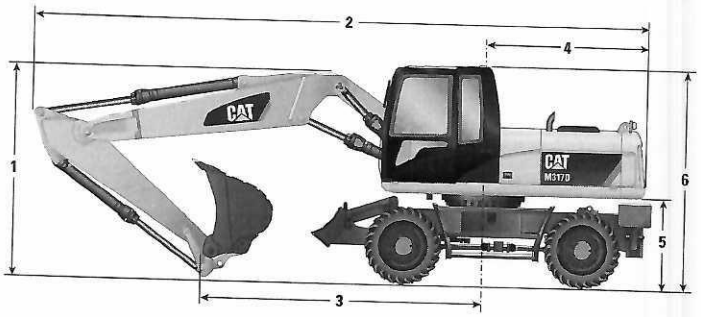

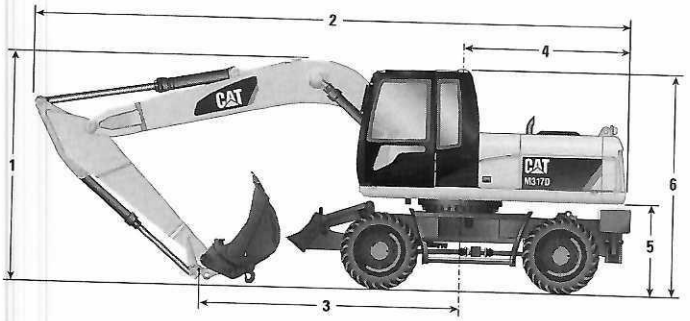

		VA Boom		One-Piece Boom	
Stick Length	mm	**2400**	**2600**	**2400**	**2600**
1 Shipping Height	mm	3150	3150	3150	3150
2 Shipping Length	mm	8480	8470	8330	8330
3 Support Point	mm	3660	3560	3280	3160
4 Tail Swing Radius	mm	2210		2210	
5 Counterweight Clearance	mm	1332		1332	
6 Cab Height	mm	3150		3150	
Overall Machine Width	mm	2550		2550	

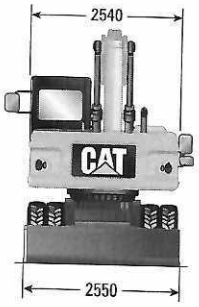

*Maximum tire clearance with outrigger fully down

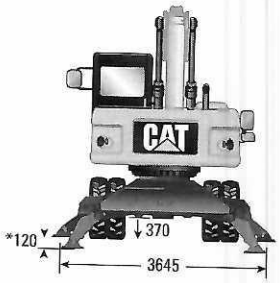

Roading position with VA Boom and 2400 mm stick

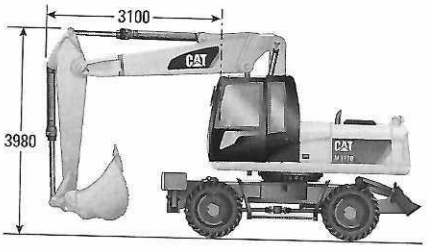

Undercarriage with blade only

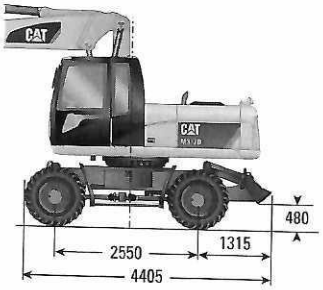

Undercarriage with 1 set of outriggers and blade

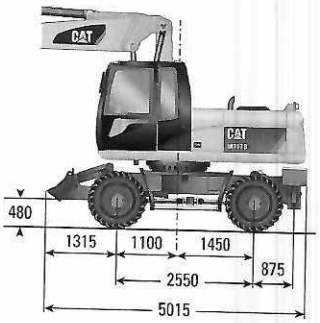

M317D2 Wheeled Excavator Specifications

Working Ranges

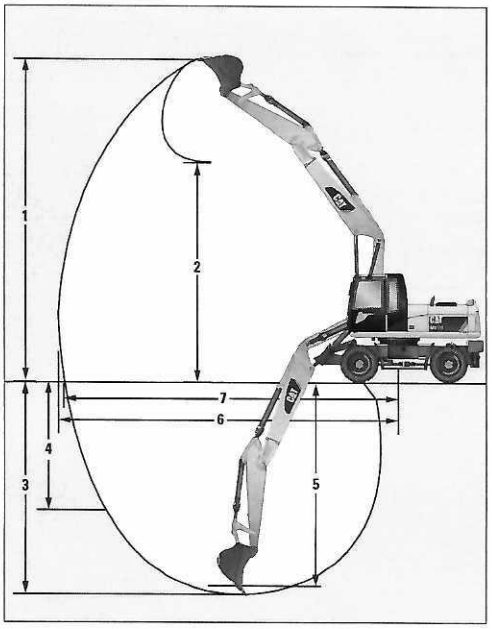

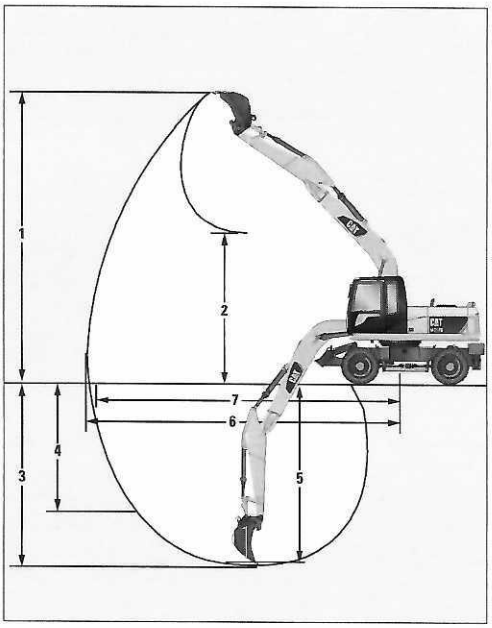

		VA Boom		One-Piece Boom	
Stick Length	mm	**2400**	**2600**	**2400**	**2600**
1 Digging Height	mm	10 230	10 380	9070	9190
2 Dump Height	mm	7140	7300	6110	6230
3 Digging Depth	mm	5890	6090	5690	5890
4 Vertical Wall Digging Depth	mm	3920	4090	3650	3820
5 Depth 2.5 m Straight Clean-Up	mm	5690	5900	5490	5700
6 Reach	mm	9360	9560	9160	9350
7 Reach at Ground Level	mm	9190	9380	8970	9170
Bucket Forces (ISO 6015)	kN	114	114	114	114
Stick Forces (ISO 6015)	kN	77	73	77	73

Values 1-7 are calculated with a quick coupler and a bucket 1100 mm/0.83 m³ with a tip radius of 1574 mm.

Bucket and stick force values are calculated with heavy lift on (no quick coupler) and a cutting edge of 1237 mm.

Bucket Specifications**

Contact your Cat dealer for special bucket requirements.

Pin-On Buckets					Variable Adjustable Boom 5200 mm						One-Piece Boom 5050 mm					
Stick Length					2400 mm			2600 mm			2400 mm			2600 mm		
	Width	Weight*	Capacity (ISO)	Adapters	Free on wheels	Blade lowered	1 set of stabilizer lowered	Free on wheels	Blade lowered	1 set of stabilizer lowered	Free on wheels	Blade lowered	1 set of stabilizer lowered	Free on wheels	Blade lowered	1 set of stabilizer lowered
	mm	kg	m^3													
General Duty	750	495	0.49	3												
	1100	622	0.80	4												
	1200	668	0.91	5												
Ditch Cleaning	1800	505	0.73													
	2000	540	0.83													
Tiltable Ditch Cleaning	1800	815	0.61													
	2000	855	0.68													

*Bucket weight includes Ground Engaging Tools.

**Not all buckets are available from factory or in the region. Please contact your Cat dealer for more information.

The above loads are in compliance with hydraulic excavator standard EN474, they do not exceed 87% of hydraulic lifting capacity or 75% of tipping capacity with front linkage fully extended at ground line with bucket curled.

Capacity based on ISO 7451.

Bucket weight with Long tips.

Maximum material density 1800 kg/m^3

Maximum material density 1500 kg/m^3

Maximum material density 1200 kg/m^3

Not recommended

Caterpillar recommends using appropriate work tools to maximize the value customers receive from our products. Use of work tools, including buckets, which are outside of Caterpillar's recommendations or specifications for weight, dimensions, flows, pressures, etc. may result in less-than-optimal performance, including but not limited to reductions in production, stability, reliability, and component durability. Improper use of a work tool resulting in sweeping, prying, twisting and/or catching of heavy loads will reduce the life of the boom and stick.

M317D2 Wheeled Excavator Specifications

Bucket Specifications**

Contact your Cat dealer for special bucket requirements.

CW Quick Coupler Buckets					Variable Adjustable Boom 5200 mm						One-Piece Boom 5050 mm					
Stick Length					2400 mm			2600 mm			2400 mm			2600 mm		
	Width	Weight*	Capacity (ISO)	Adapters	Free on wheels	Blade lowered	1 set of stabilizer lowered	Free on wheels	Blade lowered	1 set of stabilizer lowered	Free on wheels	Blade lowered	1 set of stabilizer lowered	Free on wheels	Blade lowered	1 set of stabilizer lowered
	mm	kg	m^3													
General Duty	600	468	0.35	3												
	750	504	0.49	3												
	900	534	0.62	4												
	1100	600	0.79	4												
	1200	645	0.91	5												
Heavy Duty	1200	679	0.91	5												
Ditch Cleaning	1800	470	0.73													
	2000	505	0.83													
Tiltable Ditch Cleaning	1800	775	0.61													
	2000	815	0.68													

*Bucket weight includes Ground Engaging Tools.

**Not all buckets are available from factory or in the region. Please contact your Cat dealer for more information.

The above loads are in compliance with hydraulic excavator standard EN474, they do not exceed 87% of hydraulic lifting capacity or 75% of tipping capacity with front linkage fully extended at ground line with bucket curled.

Capacity based on ISO 7451.

Bucket weight with Long tips.

Maximum material density 1800 kg/m^3

Maximum material density 1500 kg/m^3

Maximum material density 1200 kg/m^3

Not recommended

Caterpillar recommends using appropriate work tools to maximize the value customers receive from our products. Use of work tools, including buckets, which are outside of Caterpillar's recommendations or specifications for weight, dimensions, flows, pressures, etc. may result in less-than-optimal performance, including but not limited to reductions in production, stability, reliability, and component durability. Improper use of a work tool resulting in sweeping, prying, twisting and/or catching of heavy loads will reduce the life of the boom and stick.

Work Tools Matching Guide*

When choosing between various work tool models that can be installed onto the same machine configuration, consider work tool application, productivity requirements, and durability. Refer to work tool specifications for application recommendations and productivity information.

Without Quick Coupler			Variable Adjustable Boom 5200 mm				One-Piece Boom 5050 mm			
			(1)		(2)		(1)		(2)	
Stick Length (mm)			2400	2600	2400	2600	2400	2600	2400	2600
Hammers	H110 ES, H115 ES									
	H120 ES			X						
Multi-Grapples	G310B	D, R								
	G315B	D				X				X
		R				X				X
Compactor	CVP75									
Orange Peel Grapples	GSH15B 5 tines	400								
		500								
		600								
		800								
	GSH15B 4 tines	600								
		800								

(1) = Blade lowered

(2) = Blade and outriggers lowered

With Quick Coupler (CW-20, CW-20S)**										
Hammers	H110 ES, H115 ES									
	H120 ES		X	X	X	X	X	X		
Multi-Grapples	G310B	D	X					X		
	G310B	R						X		
	G315B	D, R			X				X	
Compactor	CVP75									

*Work tools may not be available in your region. Please contact your Cat dealer for information.

**CW-type couplers not available for South America, Asia, China, and Indonesia. Cat Pin-Grabber couplers are available for these regions.

- 360° Working Range
- ±45° (front or rear with blade down)
- Over the front only
- Maximum material density 3000 kg/m³
- Maximum material density 1800 kg/m³
- Maximum material density 1200 kg/m³
- X — Not recommended

M317D2 Wheeled Excavator Specifications

Lift Capacities – Variable Adjustable Boom (5200 mm)

All values are in kg, without bucket and without QC, with counterweight (3900 kg), heavy lift on.

Load at maximum reach (sticknose/bucket pin) | Load over front | Load over rear | Load over side | Load point height

Medium Stick
2400 mm

	Undercarriage configuration	3.0 m			4.5 m			6.0 m			7.5 m						m
6.0 m	Rear blade up				*5400	4800	4300	4300	2950	2700				*3300	2550	2300	6.50
	Rear blade down					*5400	4900		*4900	3050					*3300	2650	
	Blade and stabilizer down					*5400	*5400		*4900	4550					*3300	*3300	
4.5 m	Rear blade up				*6050	4550	4100	4200	2900	2600				3050	2100	1850	7.29
	Rear blade down					*6050	4700		*5000	3000					*3100	2150	
	Blade and stabilizer down					*6050	*6050		*5000	4500					*3100	*3100	
3.0 m	Rear blade up				6300	4200	3750	4050	2750	2500	2900	1950	1750	2750	1850	1650	7.71
	Rear blade down					*7100	4350		*5300	2850		*4300	2000		*3100	1900	
	Blade and stabilizer down					*7100	6750		*5300	4350		*4300	3050		*3100	2950	
1.5 m	Rear blade up				5950	3900	3450	3900	2600	2350	2800	1900	1700	2650	1800	1600	7.81
	Rear blade down					*7900	4000		*5750	2700		4300	1950		*3250	1850	
	Blade and stabilizer down					*7900	6400		*5750	4150		4300	3000		*3250	2850	
0.0 m	Rear blade up				5750	3700	3300	3800	2500	2250	2800	1850	1650	2750	1800	1600	7.60
	Rear blade down					*7850	3850		*5700	2600		*4250	1900		*3550	1900	
	Blade and stabilizer down					*7850	6200		*5700	4050		*4250	2950		*3550	2900	
–1.5 m	Rear blade up	*7100	6900	5950	5750	3700	3250	3750	2500	2200				3050	2000	1800	7.06
	Rear blade down		*7100	*7100		*7000	3800		*5150	2550					*3800	2100	
	Blade and stabilizer down		*7100	*7100		*7000	6150		*5150	4050					*3800	3250	
–3.0 m	Rear blade up				*5250	3750	3300	*3400	2550	2300							
	Rear blade down					*5250	3900		*3400	2650							
	Blade and stabilizer down					*5250	*5250		*3400	*3400							

Lift Capacities – Variable Adjustable Boom (5200 mm)

All values are in kg, without bucket and without QC, with counterweight (3900 kg), heavy lift on.

Load at maximum reach (sticknose/bucket pin) | Load over front | Load over rear | Load over side | Load point height

Long Stick
2600 mm

	Undercarriage configuration	3.0 m			4.5 m			6.0 m			7.5 m						m
6.0 m	Rear blade up				*4950	4800	4350	4300	3000	2700				*3000	2450	2200	6.73
	Rear blade down					*4950	*4950		*4750	3100					*3000	2500	
	Blade and stabilizer down					*4950	*4950		*4750	4600					*3000	*3000	
4.5 m	Rear blade up				*5800	4600	4150	4250	2950	2650	*2850	2000	1800	*2850	2000	1800	7.50
	Rear blade down					*5800	4750		*4900	3000		*2850	2050		*2850	2050	
	Blade and stabilizer down					*5800	*5800		*4900	4500		*2850	*2850		*2850	*2850	
3.0 m	Rear blade up				6350	4250	3800	4100	2800	2500	2900	1950	1750	2650	1800	1600	7.91
	Rear blade down					*6950	4400		*5200	2850		*4200	2050		*2850	1850	
	Blade and stabilizer down					*6950	6800		*5200	4350		*4200	3100		*2850	2850	
1.5 m	Rear blade up				6000	3900	3450	3900	2650	2350	2800	1900	1700	2550	1700	1550	8.00
	Rear blade down					*7800	4050		*5700	2700		4350	1950		*2950	1750	
	Blade and stabilizer down					*7800	6400		*5700	4200		4300	3000		*2950	2750	
0.0 m	Rear blade up				5800	3750	3300	3800	2500	2250	2750	1850	1650	2650	1750	1550	7.80
	Rear blade down					*7900	3850		*5750	2600		4250	1900		*3200	1800	
	Blade and stabilizer down					*7900	6200		*5750	4050		4250	2950		*3200	2800	
–1.5 m	Rear blade up	*6850	*6850	5900	5750	3700	3250	3750	2500	2200				2900	1950	1700	7.28
	Rear blade down		*6850	*6850		*7150	3800		*5250	2550					*3750	2000	
	Blade and stabilizer down		*6850	*6850		*7150	6150		*5250	4000					*3750	3100	
–3.0 m	Rear blade up				*5550	3750	3300	3800	2550	2250				*3200	2350	2100	6.35
	Rear blade down					*5550	3850		*3850	2600					*3200	2450	
	Blade and stabilizer down					*5550	*5550		*3850	*3850					*3200	*3200	

*Limited by hydraulic rather than tipping load.

Lift capacity ratings are based on ISO 10567:2007, they do not exceed 87% of hydraulic lifting capacity or 75% of tipping load. The load point is the center line of the bucket pivot mounting pin on the stick. The oscillating axle must be locked. Lifting capacities are based on the machine standing on a firm uniform supporting surface and the Variable Boom Cylinder adjusted to the maximum length. For lifting capacity including bucket and/or quick coupler, the respective weight has to be subtracted from above values. The use of a work tool attachment point to handle/lift objects, could affect the machine lift performance.

Always refer to the appropriate Operation and Maintenance Manual for specific product information.

Lift Capacities – One-Piece Boom (5050 mm)

All values are in kg, without bucket and without QC, with counterweight (3900 kg), heavy lift on.

Load at maximum reach (sticknose/bucket pin) | Load over front | Load over rear | Load over side | Load point height

Medium Stick
2400 mm

	Undercarriage configuration	3.0 m			4.5 m			6.0 m			7.5 m						m
6.0 m	Rear blade up							4250	2950	2700				*3250	2750	2500	6.24
	Rear blade down								*4300	3050					*3250	2850	
	Blade and stabilizer down								*4300	*4300					*3250	*3250	
4.5 m	Rear blade up				*5700	4600	4100	4200	2900	2650				*3100	2200	2000	7.07
	Rear blade down					*5700	4700		*4900	3000					*3100	2300	
	Blade and stabilizer down					*5700	*5700		*4900	4450					*3100	*3100	
3.0 m	Rear blade up				6350	4250	3800	4100	2800	2500				2900	2000	1800	7.50
	Rear blade down					*6900	4400		*5350	2900					*3100	2050	
	Blade and stabilizer down					*6900	6750		*5350	4350					*3100	3100	
1.5 m	Rear blade up				6000	3950	3550	3950	2650	2400	2850	1950	1750	2800	1900	1700	7.60
	Rear blade down					*7850	4100		*5750	2750		*4150	2000		*3300	1950	
	Blade and stabilizer down					*7850	6450		*5750	4200		*4150	3050		*3300	2950	
0.0 m	Rear blade up				5850	3800	3400	3850	2550	2300				2850	1950	1750	7.39
	Rear blade down					*8050	3950		*5850	2650					*3650	2000	
	Blade and stabilizer down					*8050	6250		*5850	4100					*3650	3050	
–1.5 m	Rear blade up	*8500	7050	6050	5800	3750	3350	3800	2550	2250				3200	2150	1950	6.83
	Rear blade down		*8500	7250		*7450	3900		*5400	2650					*4350	2250	
	Blade and stabilizer down		*8500	*8500		*7450	6200		*5400	4050					*4350	3400	
–3.0 m	Rear blade up	*7900	7150	6200	5850	3850	3400							*3950	2700	2450	5.83
	Rear blade down		*7900	7400		*5850	3950								*3950	2800	
	Blade and stabilizer down		*7900	*7900		*5850	*5850								*3950	*3950	

Lift Capacities – One-Piece Boom (5050 mm)

All values are in kg, without bucket and without QC, with counterweight (3900 kg), heavy lift on.

Load at maximum reach (sticknose/bucket pin) | Load over front | Load over rear | Load over side | Load point height

Long Stick
2600 mm

	Undercarriage configuration	3.0 m			4.5 m			6.0 m			7.5 m						m
6.0 m	Rear blade up							4300	3000	2700				*2950	2600	2350	6.47
	Rear blade down								*4350	3100					*2950	2700	
	Blade and stabilizer down								*4350	*4350					*2950	*2950	
4.5 m	Rear blade up							4250	2950	2650				*2800	2150	1900	7.27
	Rear blade down								*4800	3050					*2800	2200	
	Blade and stabilizer down								*4800	4500					*2800	*2800	
3.0 m	Rear blade up				6400	4300	3850	4100	2800	2550	2900	2000	1800	2800	1900	1700	7.69
	Rear blade down					*6700	4450		*5250	2900		*3900	2050		*2850	1950	
	Blade and stabilizer down					*6700	*6700		*5250	4350		*3900	3100		*2850	*2850	
1.5 m	Rear blade up				6050	4000	3550	3950	2700	2400	2850	1950	1750	2700	1800	1650	7.79
	Rear blade down					*7750	4150		*5700	2750		4300	2000		*3000	1900	
	Blade and stabilizer down					*7750	6450		*5700	4200		4300	3050		*3000	2850	
0.0 m	Rear blade up	*4400	*4400	*4400	5850	3800	3400	3850	2600	2300	2800	1900	1700	2750	1850	1650	7.58
	Rear blade down		*4400	*4400		*8100	3950		*5850	2650		*4050	1950		*3300	1950	
	Blade and stabilizer down		*4400	*4400		*8100	6250		*5850	4100		*4050	3000		*3300	2950	
–1.5 m	Rear blade up	*8150	7000	6050	5800	3750	3350	3800	2550	2250				3050	2050	1850	7.04
	Rear blade down		*8150	7250		*7600	3900		*5500	2600					*3950	2150	
	Blade and stabilizer down		*8150	*8150		*7600	6200		*5500	4050					*3950	3250	
–3.0 m	Rear blade up	*8450	7150	6150	5850	3800	3400	3850	2600	2300				3800	2550	2300	6.07
	Rear blade down		*8450	7350		*6150	3950		*4100	2700					*3950	2650	
	Blade and stabilizer down		*8450	*8450		*6150	*6150		*4100	*4100					*3950	*3950	

*Limited by hydraulic rather than tipping load.

Lift capacity ratings are based on ISO 10567:2007, they do not exceed 87% of hydraulic lifting capacity or 75% of tipping load. The load point is the center line of the bucket pivot mounting pin on the stick. The oscillating axle must be locked. Lifting capacities are based on the machine standing on a firm uniform supporting surface. For lifting capacity including bucket and/or quick coupler, the respective weight has to be subtracted from above values. The use of a work tool attachment point to handle/lift objects, could affect the machine lift performance.

Always refer to the appropriate Operation and Maintenance Manual for specific product information.

M317D2 Standard Equipment

Standard Equipment

Standard equipment may vary. Consult your Cat dealer for details.

ELECTRICAL

- Alternator, 75 A
- Lights
  - Boom working light
  - Cab interior light
  - Roading lights two front
  - Roading lights two rear
  - Working lights, cab mounted (front and rear)
- Main shut-off switch
- Maintenance free heavy-duty batteries
- Signal/warning horn
- Travel alarm

ENGINE

- Automatic engine speed control, including One-Touch Low Idle
- Automatic starting aid
- Cat C4.4 ACERT meets China Nonroad Stage III emission standards, equivalent to Tier 3 and Stage IIIA
- Fuel/water separator with level indicator, fuel priming pump, water level switch and a visual restriction indicator
- Power Mode selector (Eco, Power and Travel modes)
- Altitude capability: 3000 m

HYDRAULICS

- Heavy lift mode
- Load-sensing Plus hydraulic system
- Separate swing pump
- Stick regeneration circuit
- Anti drift devices for boom, stick and bucket*
- Cat XT-6 ES hoses
- Adjustable hydraulic sensitivity
- Oil cooler
- Hydralic mineral oil, Cat HYDO™ Advanced 10 oil

OPERATOR STATION

- Adjustable armrests
- Air conditioner, heater and defroster with automatic climate control
- Ash tray with cigarette lighter (24 volt)
- Beverage cup/can holder
- Bolt-on FOGS capability
- Bottle holder
- Bottom mounted parallel wiping system that covers the upper and lower windshield glass
- Camera mounted on counterweight displays through cab monitor
- Coat hook
- Floor mat, washable, with storage compartment
- Fully adjustable suspension seat with mechanical suspension, manual weight adjustment, mechanical lumbar support, and headrest
- Instrument panel and gauges
  - Information and warning messages in local language
  - Gauges for fuel level, engine coolant and hydraulic oil temperature
  - Filters/fluids change interval
  - Indicators for headlights, turning signal, low fuel, engine dial setting
  - Clock with 10-day backup battery
- Laminated front windshield
- Left side console, tiltable, with lock out for all controls
- Literature compartment behind seat
- Literature holder in right console
- Mobile phone holder
- Parking brake
- Positive filtered ventilation, variable speed
- Power supply, 12V-7A
- Rear window, emergency exit
- Retractable seat belt
- Skylight
- Sliding door windows
- Steering column, tiltable
- Storage area suitable for a lunch behind the seat, equipped with a cover
- Sunshade for windshield and skylight
- Travel speed lock
- Visor for rain protection
- Washer bottle for wipers
- Interior lighting
- Joysticks, pilot operated
- Travel speed lock

UNDERCARRIAGE

- Heavy-duty axles, with advanced disc brake system and travel motor, adjustable braking force
- Oscillating front axle, lockable, with remote greasing point
- Two tool boxes in undercarriage, left and right
- Two-piece drive shaft
- Wide steps, left and right
- All wheel drive
- Full hydraulic steering
- Creeper speed
- Hydrostatic transmission, two speeds

OTHER EQUIPMENT

- Automatic swing brake
- Counterweight, 3500 kg
- Mirrors, frame and cab
- Cat Product Link
- Capability to add other auxiliary hydraulic circuits
- Cat Datalink and Electronic Technician capability
- S·O·S quick sampling valves for engine oil, hydraulic oil and coolant

*Anti-drift valve for bucket available for China, Asia and Indonesia only.

CONTRACTOR'S TENDER (FORMS OF TENDER)

MANTRAC CAT

Form of Tender

Date: 6th January 2022

To: Conservation Commissioner

Ngorongoro Conservation Area Authority,

P.O Box 1, Ngorongoro Crater

Arusha, Tanzania.

Gentlemen and/or Ladies:

Having examined the Tendering Documents including Addenda Nos: **N/A**, the receipt of which is hereby duly acknowledged, we, the undersigned, offer to supply and deliver **SUPPLY OF ONE (1) UNIT WHEEL EXCAVATOR** in conformity with the said Tendering Documents for the sum of **Tanzania shillings Five Hundred And Seventy Three Million Three Hundred Thousand Only Exclusive VAT (TZS 573,300,000 .00), DDP-Ngorongoro Conservation Area Authority headquarter**, or such other sums as may be ascertained in accordance with the Schedule of Prices attached herewith and made part of this Tender.

We declare that our tendering price did not involve agreements with other tenderers for the purpose of tender suppression.

We are hereby confirm **Tanzania Institute of Arbitrators,** to be the Appointing Authority, to appoint the adjudicator in case of any arisen disputes in accordance with ITT 40.1

We undertake, if our Tender is accepted, to deliver the goods in accordance with the delivery schedule specified in the Schedule of Requirements.

If our Tender is accepted, we undertake to provide a Performance Security in the form, in the amounts, and within the times specified in the Tendering Documents.

We declare that, as tenderer(s) we do not have conflict of interest with reference to ITT clause 3.6

We agree to abide by this Tender for the Tender Validity Period specified in TDS 19, and it shall remain binding upon us and may be accepted at any time before the expiration of that period.

We are not participating, as Tenderers, in more than one Tender in this tendering process, other than alternative offers in accordance with the Tendering Documents.

MANTRAC
Plot 4A Nyerere Road
P.O. Box 9262
Dar es Salaam
Tel : +(255) 22 286 0160/1/2
Fax : +(255) 22 286 4284
Email : mantrac@mantrac.co.tz

MANTRAC
Plots 60 & 61, Nyakato Road
P.O Box 433
Mwanza
Tel : +(255) 28 257 2205
Fax : +(255) 28 257 0353
Email : mwanza@mantrac.co.tz

MANTRAC
Plot 5 Boma Road
P.O. Box 543
Moshi
Tel : +(255) 27 275 1711
Fax : +(255) 27 275 1709
Email : moshi@mantrac.co.tz

MANTRAC
Century Plaza, Plot No. 2A
Block D, Mafiat, Mwanjelwa
P.O Box 1718 Mbeya
Tel : + (255) 25 250 0992
Fax : + (255) 25 250 0993
Email : mbeya@mantrac.co.tz

MANTRAC
Plot 122, Block J
P.O.Box 277
Mtwara
Tel : + (255) 23 233 4685
Fax : + (255) 23 233 4684
Email : mtwara@mantrac.co.tz

MANTRAC CAT

Form of Tender

Date: 6th January 2022

To: Conservation Commissioner

Ngorongoro Conservation Area Authority,

P.O Box 1, Ngorongoro Crater

Arusha, Tanzania.

Gentlemen and/or Ladies:

Having examined the Tendering Documents including Addenda Nos: **N/A**, the receipt of which is hereby duly acknowledged, we, the undersigned, offer to supply and deliver **SUPPLY OF ONE (1) UNIT WHEEL EXCAVATOR** in conformity with the said Tendering Documents for the sum of **Tanzania shillings Five Hundred And Seventy Three Million Three Hundred Thousand Only Exclusive VAT (TZS 573,300,000 .00), DDP-Ngorongoro Conservation Area Authority headquarter**, or such other sums as may be ascertained in accordance with the Schedule of Prices attached herewith and made part of this Tender.

We declare that our tendering price did not involve agreements with other tenderers for the purpose of tender suppression.

We are hereby confirm **Tanzania Institute of Arbitrators,** to be the Appointing Authority, to appoint the adjudicator in case of any arisen disputes in accordance with ITT 40.1

We undertake, if our Tender is accepted, to deliver the goods in accordance with the delivery schedule specified in the Schedule of Requirements.

If our Tender is accepted, we undertake to provide a Performance Security in the form, in the amounts, and within the times specified in the Tendering Documents.

We declare that, as tenderer(s) we do not have conflict of interest with reference to ITT clause 3.6

We agree to abide by this Tender for the Tender Validity Period specified in TDS 19, and it shall remain binding upon us and may be accepted at any time before the expiration of that period.

We are not participating, as Tenderers, in more than one Tender in this tendering process, other than alternative offers in accordance with the Tendering Documents.

MANTRAC
Plot 4A Nyerere Road
P.O. Box 9262
Dar es Salaam
Tel : +(255) 22 286 0160/1/2
Fax : +(255) 22 286 4284
Email : mantrac@mantrac.co.tz

MANTRAC
Plots 60 & 61, Nyakato Road
P.O Box 433
Mwanza
Tel : +(255) 28 257 2205
Fax : +(255) 28 257 0353
Email : mwanza@mantrac.co.tz

MANTRAC
Plot 5 Boma Road
P.O. Box 543
Moshi
Tel : +(255) 27 275 1711
Fax : +(255) 27 275 1709
Email : moshi@mantrac.co.tz

MANTRAC
Centinary Plaza, Plot No. 2A
Block D, Mafiat, Mwanjelwa
P.O Box 1718 Mbeya
Tel : + (255) 25 250 0942
Fax : + (255) 25 250 0943
Email : mbeya@mantrac.co.tz

MANTRAC
Plot 122, Block J
P.O.Box 277
Mtwara
Tel : + (255) 23 233 4685
Fax : + (255) 23 233 4684
Email : mtwara@mantrac.co.tz

POWER OF ATTORNEY
TO ALL IT MAY CONCERN

THAT BY THIS POWER OF ATTORNEY given on the 4th January 2022,
WE the undersigned **MANTRAC TANZANIA LIMITED** of P. O. Box 9262 Dar es Salaam, by virtue of authority conferred to us by the Board Resolution No 1 of 4th day of January 2022, do hereby ordain nominate and appoint **BUTWA GODLUCK SANGA** of P. O. Box 9262 Dar es Salaam to be our true lawful Attorney and Agent, with full power and authority, for us and in our names, and for our accounts and benefits, to do any, or all of the following acts, in the execution of **Tender No. AE/055/2021 – 22/HQ/TCRP/G/01 LOT 1** that is to say;

> To act for the company and do any other thing or things incidental for **Tender No. AE/055/2021 – 22/HQ/TCRP/G/01 LOT 1 – SUPPLY OF ONE (1) UNIT WHEEL EXCAVATOR NGORONGORO CONSERVATION AREA AUTHORITY.**

AND provided always that this Power of Attorney shall not revoke or in any manner affect any future power of attorney given to any other person or persons for such other power or powers shall remain and be of the same force and affect as if this deed has not been executed.

AND we hereby undertake to ratify everything, which our Attorney or any substitute or substitutes or agent or agents appointed by him under this power on his behalf herein before contained shall do or purport to do in virtue of this Power of Attorney.

SEALED with the common seal of the said **MANTRAC TANZANIA LIMITED** and delivered in the presence of us this **4th Day of January 2022.**

IN WITNESS whereof we have signed this deed on this **4th day of January 2022** at Dar es salaam for and on behalf of **MANTRAC TANZANIA LIMITED**

SEALED and **DELIVERED** by the
Common Seal of **MANTRAC TANZANIA LIMITED**
This 4th Day of January 2022

MANTRAC (T) LTD.
P. O. Box 9262
DAR ES SALAAM

.....
DONOR

VELENA ANIPENDA CLEMENCE
Advocate, Notary Public & Commissioner for Oaths
P.O. Box 75034 Dar es Salaam

BEFORE ME
.....
COMMISSIONER FOR OATHS

In the Presence of Mr. Cyril Bonifacio
Signature: .....
Position: Business Planning and Operations Director – Finance
Mantrac Tanzania Limited, P. O. Box 9262 Dar es Salaam.

ACKNOWLEDGEMENT

I **BUTWA GODLUCK SANGA** doth hereby acknowledge and accept to be Attorney of the said MANTRAC TANZANIA LIMITED under the terms and conditions contained in this POWER OF ATTORNEY and I promise to perform and discharge my duties as the lawfully appointed Attorney faithfully and honestly.

SIGNED AND DELIVERED by the said BUTWA GODLUCK SANGA Identified to me by MR. CYRIL BONIFACIO

.....
DONEE

BEFORE ME

VELENA ANIPENDA CLEMENCE
Advocate, Notary Public & Commissioner for Oaths
P.O. Box 75034 Dar es Salaam

.....
COMMISSIONER FOR OATHS

INTEGRITY FORM

UNDERTAKING BY TENDERER ON ANTI – BRIBERY POLICY / CODE OF CONDUCT AND COMPLIANCE PROGRAMME

(Regulation 78(2) of the Public Procurement Regulations, 2013 - Government Notice No.446 of 2013

This Company MANTRAC TANZANIA LIMITED places importance on competitive tendering taking place on a basis that is free, fair, competitive and not open to abuse. It is pleased to confirm that it will not offer or facilitate, directly or indirectly, any improper inducement or reward to any public officer their relations or business associates, in connection with its tender, or in the subsequent performance of the contract if it is successful.

This company has an Anti-Bribery Policy/Code of Conduct and a Compliance Program which includes all reasonable steps necessary to assure that the No-bribery commitment given in this statement will be complied with by its managers and employees, as well as by all third parties working with this company on the public sector projects, or contract including agents, consultants, consortium partners, sub- contractors and suppliers. Copies of our Anti-Bribery Policy/Code of Conduct and Compliance Program are attached

Authorized Signature: _____

Name and Title of Signatory: BUTNA GODLUCK SANGA, GM MACHINE SALES

Name of Tenderer: MANTRAC TANZANIA LTD

Address: P.O. BOX 9262, DAR ES SALAAM

POWER OF ATTORNEY

Version:	**1:01**
Issue:	120508
Date:	**August 2014**

1 Introduction

1.1 The Mantrac and Unatrac Group of companies (the "**Group**") does not condone bribery or corruption, wherever and in whatever form they may be encountered.

1.2 Many countries (including a number of those within which the Group operates) have implemented laws and regulations that prohibit bribery. In those jurisdictions where bribery is a criminal offence, the penalties include potential custodial sentences for individuals and unlimited fines for commercial organisations. Bribery could also expose the Group to untold damage to its reputation.

1.3 The Group and its directors are committed to operating fairly, honestly and openly in accordance with the laws of each jurisdiction in which the Group operates. Any form of bribery and corruption by or on behalf of the Group, or with which the Group is associated, would very likely have a significant, adverse impact on the Group's reputation for integrity and its general market standing.

1.4 Accordingly, the Group and its directors are committed to having appropriate and proportionate procedures in place to prevent bribery and corruption. This policy is intended to set out the Group's approach to bribery and to state clearly the standards and principles required to ensure conformance with relevant legislation and the Group's internal requirements. The [redacted]

Version:	**1:01**
Issue:	120508
Date:	**August 2014**

3 Policy

3.1 Key principles

3.1.1 Staff must not give, offer, promise, accept, request or authorise a bribe (or omit to take any other step that might amount to an offence under any applicable anti-bribery and corruption laws). Staff must also be aware that, under the UK Bribery Act 2010, it is an offence for a commercial organisation (such as the Group) to fail to prevent bribery by a person associated with it. All payments or gifts which might amount to bribery are forbidden under the terms of this policy and may result in the immediate dismissal of any staff involved in their payment or receipt and/or the termination of a business relationship.

3.1.2 Recklessness or "wilful blindness" in respect of any such incident is also likely to be in contravention of applicable laws and/or regulations and will amount to a breach of th

and will amount to a breach of this policy.

3 A more detailed explanation of what constitutes a bribe is set out in paragraph 3.2 of this policy.

4 Bribery and corruption are also wholly incompatible with the Group's *Code of Business Ethics* attached and th

3.3 **What is corruption?**

3.3.1 Corruption or corrupt behaviour is any form of unethical business practice. Such behaviour may include the giving or receiving of bribes.

3.4 **Records and controls**

3.4.1 The Group maintains appropriate internal records and controls to evidence the legitimate business reasons for granting gifts or benefits to third parties and the frequency and nature of such gifts or benefits. Such internal records are maintained by the Finance Manager in each territory detailed in the organisational chart annexed hereto. Through maintaining accurate and transparent books, records and financial reporting, the Group intends to create a more difficult environment for anyone trying to implement or hide a bribe.

3.4.2 It is not permitted to establish accounts or internal budgets for the purpose of facilitating bribes or influencing transactions.

3.5 **Gifts and hospitality**

3.5.1 The Group's detailed policy on gifts and business entertainment is set out in the *Gifts, Rewards and Hospitality Policy* attached. As a general rule:

3.5.1.1 reasonable and appropriate hospitality (given and received); or

3.5.1.2 the giving of a ceremonial gift on a festival or at another special time or as token of thanks

will be acceptable where it is: (i) proportionate; (ii) in keeping with usual business practice; (iii) in furtherance of an identifiable and legitimate business purpose; (iv) in compliance with all applicable laws and regulations; and (v) properly recorded. Factors such as timing, relative value and effect on the recipient must also be considered.

3.5.2 Where the recipient of a gift or hospitality is a public official (or an associate of a public official), a stricter standard of behaviour is required. The term "**public official**" should be interpreted widely and should be taken to encompass, for example, members of local or national governments and officials or agents of international organisations. All staff should seek clearance from the relevant Territory Manager before offering, giving, accepting, promising, requesting or authorising gifts or hospitality in relation to a public official.

3.6 **Facilitation payments**

3.6.1 Facilitation payments are payments (usually small) made directly to public officials in order to facilitate routine government action.

3.6.2 Facilitation payments, whether they be large, repeated, planned or otherwise made, are not permitted under this policy and the Group will not condone them. If a facilitation payment is demanded, it should not be made and the relevant Territory Manager must be consulted in the first instance. Where a facilitation payment has been demanded, the relevant Territory Manager may consider such demand on a case-by-case basis, including having regard to whether there may be any element of duress involved in such demand.

3.6.3 Payments made through official government agency channels which are not for the direct personal benefit of an individual public official or employee are not prohibited for the purposes of this policy.

3.7 **Risk assessment**

3.7.1 The Group and each of its businesses must perform a risk assessment exercise to identify and address bribery and corruption risk. Risk assessments should be comprehensive, conducted on a periodic basis and identify staff and third parties who are considered to be higher risk (for example, those who operate in a high-risk jurisdiction, operate in a market sector that is perceived to be high-risk or who otherwise perform activities in connection with which there is perceived to be a high risk of bribery).

3.7.2 The Group must apply controls tailored to manage the risks identified through the risk assessment process and the appropriateness of such controls should also be considered and reviewed periodically. These controls should, amongst other things, include the taking of steps to ensure that all staff have received and understood the Group's policies in respect of bribery and corruption and where appropriate, should consider whether any training should be provided to staff in order to ensure that they fully understand the particular risks inherent within their business areas.

3.8 **Due diligence**

3.8.1 It is important that any company in the Group engaging a third party to act for, or on behalf of, the Group takes appropriate steps to ensure that the third party's actions and behaviour will not reflect poorly on the Group or expose the Group to potential criminal liability. Amongst other things, this means the Group must perform sufficient due diligence on third parties to ensure it is appropriate that they represent the Group.

3.8.2 A proportionate approach to such due diligence procedures should be followed, with particular care taken with respect to arrangements with consultants, agents or third parties who assist in securing business, arrange introductions to key business and government decision-makers, act according to local customs which are incompatible with this policy, or provide services in higher-risk jurisdictions. Each potential arrangement should be considered on a case by case basis.

3.8.3 Under circumstances where it is demonstrable that a third party has in place robust anti-bribery and corruption procedures, it would clearly be appropriate to place reliance on this, although the existence of such procedures of themselves alone should not be taken to obviate the need for any other due diligence to be undertaken.

4 Expectations of the Group

4.1 The prevention, detection and reporting of bribery and corruption is the responsibility of all employees throughout the Group.

4.2 It is vital that the Group's staff report suspected or actual instances of bribery or other corrupt practices, on a confidential basis, by contacting the relevant Territory Manager or Group HR Directors as set out in the organisational chart annexed hereto.

4.3 Any such reports will be received and handled in the strictest confidence and in accordance with the *Whistleblowing policy* set out in paragraph **Error! Reference source not found.** of the *Code of Business Ethics* attached.

5 Further guidance

5.1 Inevitably, decisions as to what is acceptable may not always be easy, particularly in the absence of minimum legal standards or where such standards are poorly enforced. If anyone is in doubt as to the propriety of an act or whether a potential act constitutes bribery or corruption, the matter should be referred to their immediate manager or supervisor or Compliance Officer.

5.2 The Group recognises that the risks it faces will change over time, which will in part be due to the changing nature and scale of the Group's activities and to the jurisdictions and market sectors in which it operates. The Group and its directors are committed to monitoring external and internal developments and changes and reviewing this policy periodically in the light of such changes.

5.3 Further guidance regarding what the Group regards as unethical can be found in the *Code of Business Ethics* attached.

6 **Review**

This policy is to be reviewed annually. The next review will be conducted in July 2015.

End...

PERFORMANCE BOND

CATERPILLAR®

Caterpillar S.A.R.L.

76, Rte de Frontenex
Case Postale 6000
CH-1211 Geneva 6
Switzerland
Tel: (022) 849.44.44
Fax: (022) 849.45.44
Telex: 413 323

Date: **6th January 2022**
Tender No: **AE/055/2021-22/HQ/TCRP/G/01 LOT 1**

Letter of Authorization

To: Ngorongoro Conservation Area Authority (NCAA),
P.O BOX 1,
Ngorongoro Crater,
Arusha, Tanzania.

WHEREAS Caterpillar S.A.R.L. who are established and reputable manufacturers of Construction, Material-Handling and Warehousing Equipment including Bulldozers, Excavators, Motor Graders, Roller Compactors, Wheel Loaders, Forklifts and Pallet Jacks/Stackers having factories in USA, Belgium, Finland, Brazil, UK, Thailand, China etc. do hereby authorize Mantrac Tanzania Limited, of P.O Box 9262, Dar es Salaam - Tanzania, to submit a Tender and subsequently negotiate and sign the Contract with you against IFT No. AE/055/2021-22/HQ/TCRP/G/01 LOT 1 SUPPLY OF ONE (1) UNIT WHEEL EXCAVATOR manufactured by us, and to subsequently negotiate and sign the Contract.

We hereby extend our full guarantee and warranty as per 17 Section of the General Conditions of Contract for the goods offered for supply by the above firm against this Invitation for Tenders.

Yours Sincerely,

Caterpillar SARL

By: _____
Craig A. Johnson
Assistant Secretary

CATERPILLAR S.A.R.L. SCEAU GENEVE

MANUFACTURER AUTHORIZATION LETTER

CATERPILLAR®

Caterpillar S.A.R.L.

76, Rte de Frontenex
Case Postale 6000
CH-1211 Geneva 6
Switzerland
Tel: (022) 849.44.44
Fax: (022) 849.45.44
Telex: 413 323

Date: **6th January 2022**
Tender No: **AE/055/2021-22/HQ/TCRP/G/01 LOT 1**

Letter of Authorization

To: Ngorongoro Conservation Area Authority (NCAA),
P.O BOX 1,
Ngorongoro Crater,
Arusha, Tanzania.

WHEREAS Caterpillar S.A.R.L. who are established and reputable manufacturers of Construction, Material-Handling and Warehousing Equipment including Bulldozers, Excavators, Motor Graders, Roller Compactors, Wheel Loaders, Forklifts and Pallet Jacks/Stackers having factories in USA, Belgium, Finland, Brazil, UK, Thailand, China etc. do hereby authorize Mantrac Tanzania Limited, of P.O Box 9262, Dar es Salaam - Tanzania, to submit a Tender and subsequently negotiate and sign the Contract with you against IFT No. AE/055/2021-22/HQ/TCRP/G/01 LOT 1 SUPPLY OF ONE (1) UNIT WHEEL EXCAVATOR manufactured by us, and to subsequently negotiate and sign the Contract.

We hereby extend our full guarantee and warranty as per 17 Section of the General Conditions of Contract for the goods offered for supply by the above firm against this Invitation for Tenders.

Yours Sincerely,

Caterpillar SARL

By: _____
Craig A. Johnson
Assistant Secretary